US005147973A

United States Patent [19]

Ziemba

[11] Patent Number: 5,147,973

[45] Date of Patent: Sep. 15, 1992

[54] MULTI-OPTION FUZE SYSTEM

[75] Inventor: Richard T. Ziemba, Burlington, Vt.

[73] Assignee: The United States of America as represented by the Secretary of the Army, Washington, D.C.

[21] Appl. No.: 805,354

[22] Filed: Dec. 9, 1991

[51] Int. Cl.[5] F42C 13/04

[52] U.S. Cl. 102/214; 102/216; 102/207; 102/265

[58] Field of Search 102/214, 216, 211, 207, 102/522, 523, 520, 212, 213, 265

[56] References Cited

U.S. PATENT DOCUMENTS

3,334,588	8/1967	Larsen	102/522
3,871,296	3/1975	Heilprin et al.	102/211
3,946,674	3/1976	Pettersson et al.	102/207

OTHER PUBLICATIONS

Industry and Societes, Proximity Fuze, Product Engineering (Nov. 1945), pp. 782–784.

Primary Examiner—Stephen M. Johnson

Attorney, Agent, or Firm—Anthony T. Lane; Edward Goldberg; Michael C. Sachs

[57] ABSTRACT

A launchable a fin-stabilized round having an HE warhead that is fully telescoped in a cartridge case. The round has a forward, cone-shaped nose section, a base section with a booster cavity and a high-explosive (HE) cavity located therebetween. An HE charge is positioned in the HE cavity and a booster charge is positioned in the booster cavity. A time fuze, mounted in the booster cavity, has a presettable counter that is set by the gunner at firing via a hardwire data link through an electric primer. The tiem fuze will fire the booster charge a predetermined time period after the round is launched to enable a normally disabled proximity fuze that is mounted in the nose section. The proximity fuze will detonate the HE charge upon detection of a proximate target. Also mounted in the nose section is a contact switch for detonating the HE charge upon impact with a hard target.

14 Claims, 2 Drawing Sheets

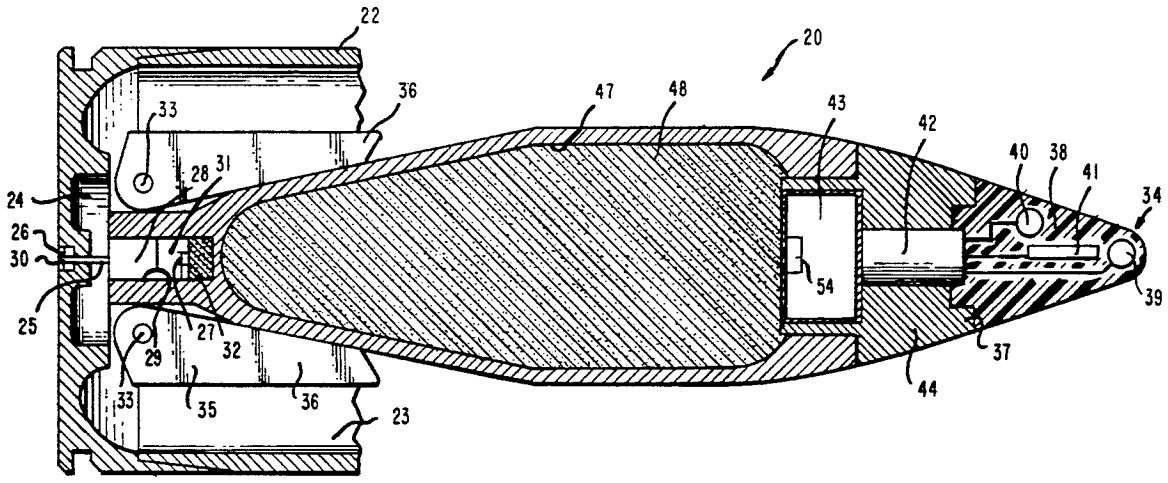

FIG. 1

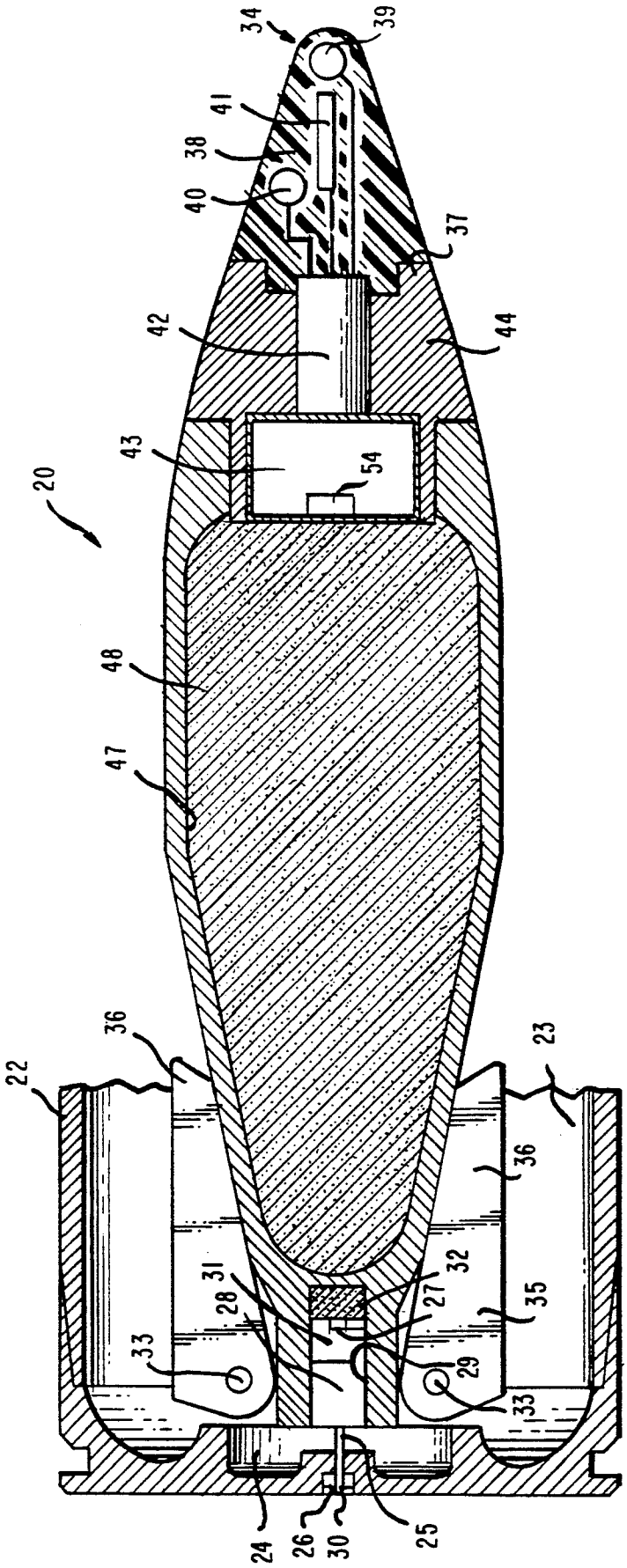
20
22
23
24
25
26
27
28
29
30
31
32
33
34
35
36
37
38
39
40
41
42
43
44
47
48
54

FIG. 4

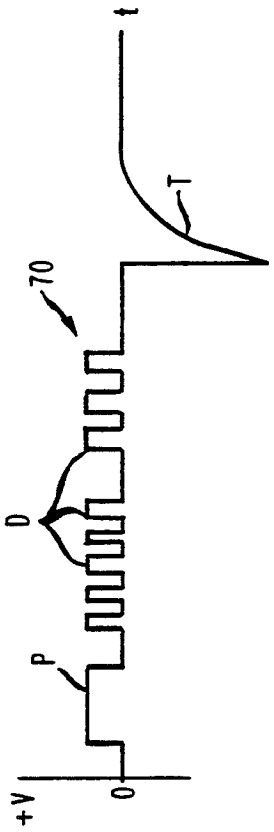
+V
0
P
D
70
T
t

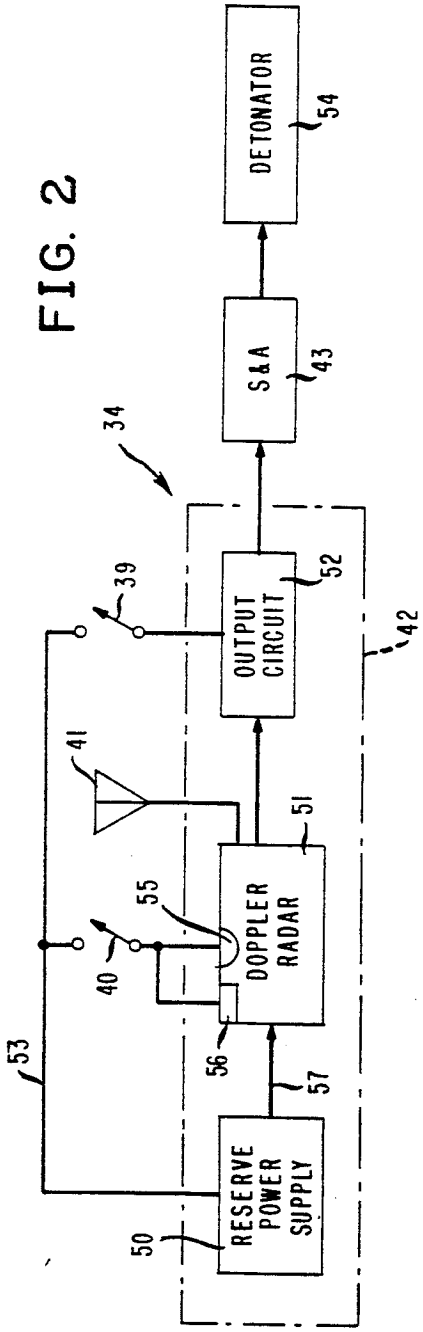
DETONATOR
54
S & A
43
34
OUTPUT CIRCUIT
52
39
42
41
DOPPLER RADAR
51
55
40
56
53
57
RESERVE POWER SUPPLY
50

FIG. 2

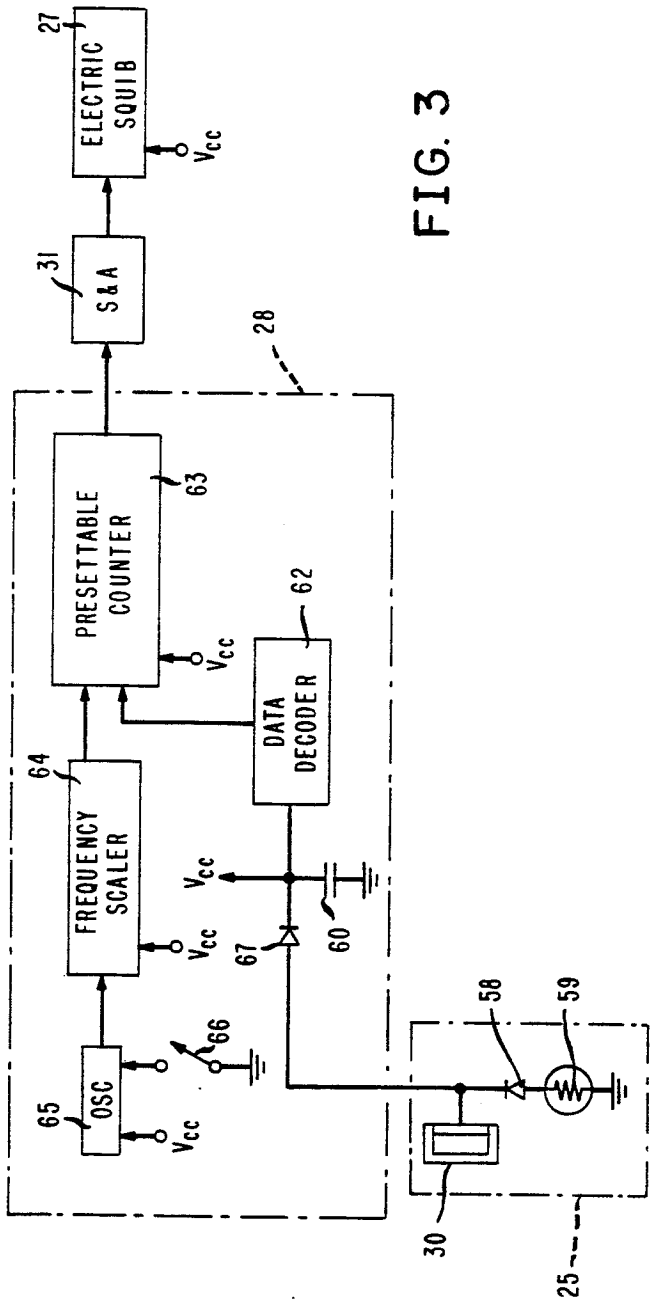
ELECTRIC SQUIB
27
V_{cc}
S & A
31
28
PRESETTABLE COUNTER
63
V_{cc}
DATA DECODER
62
FREQUENCY SCALER
64
V_{cc}
V_{cc}
67
60
OSC
65
V_{cc}
66
58
59
30
25

FIG. 3

MULTI-OPTION FUZE SYSTEM

The Government has rights in this invention pursuant to Contract No. DAAA09-76-C-2055 awarded by the Department of the Army.

BACKGROUND OF THE INVENTION

1. Field of the Invention

The present invention relates to the field of ordnance and, more particularly, to a versatile, multi-option fuze system for use with high explosive (HE) warheads.

2. Description of the Prior Art

One of the most critical problems confronting designers of HE ammunition has been the construction of a dependable, versatile multi-option fuze system for use in warheads that are to be fired from ground-based weapons of the type found on many armed combat vehicles such as tanks and the like. Ideally, a versatile fuze system capable of being effectively used on HE warheads should be operative in either a ground-to-air (air burst) mode, a ground-to-ground (air burst) mode or a ground-to-ground (impact) mode. Although there has been a long recognized need for such ammunition, no practical fuze system for performing the above-mentioned functions has yet been devised. The present invention fulfills this need.

SUMMARY OF THE INVENTION

The general purpose of this invention is to provide a multi-option fuze system for use with HE warheads. To attain this, the present invention contemplates a projectile having a unique hardwired digital time fuze functionally combined with a proximity nose fuze in such a manner so as to provide for the selective and effective use of HE warheads in either a ground-to-air (air burst) mode, a ground-to-ground (air burst) mode or a ground-to-ground (impact) mode. More specifically, the present invention includes a launchable fin-stabilized round having an HE warhead that is fully telescoped in a cartridge case. The round has a forward section, a base section with a booster cavity therein and an HE cavity located therebetween. An HE charge is positioned in the HE cavity and a booster charge is positioned in the booster cavity. A time fuze is mounted on the base section to fire the booster charge a predetermined time period after the round is launched. A normally disabled proximity fuze, mounted on the forward section, has an enable circuit for enabling the proximity fuze in response to the firing of the booster charge. A proximity detector detects proximate targets. A detonator, responsive to the proximity detector, detonates the HE charge upon the detection of a proximate target by the proximity detector. A contact switch is mounted on the nose of the proximity switch for energizing the detonator upon impact with a hard target.

It is, therefore, an object of the present invention to provide a projectile with a fuze system capable of selectively providing a proximity air-burst mode when it is desired to use the projectile against air targets.

Another specific object is to provide means for enabling the proximity fuze just as the round approaches the target area to overcome fuze jamming associated with enemy countermeasures.

A further object of the invention is the provision of a variable time-setting feature for air burst of the warhead when firing it in a flat trajectory over the earth for use when engaging "soft" targets such as troops.

Still another object is to provide a point-detonating feature which will function the round when impacting hard targets.

Yet another object of the present invention is the provision of a self-destruct feature in the event the round fails to function in the proximity mode when engaging an air target.

A still further object is to provide selectivity via fuze time-setting information that is inputted to the fuze system through a hardwired link between the round and the weapon while not complicating the "normal" round-weapon interface.

Yet a further specific object of the invention is to assure a safe warhead design which precludes the need for any mechanical or electrical penetrations of an unconventional manner into or through the HE section of the warhead.

A still further object is to allow time setting to easily be accomplished within the cycle rate of the weapon.

Yet another specific object of the invention is the provision of means for performing all fuze time-setting functions while the round is fully chambered and the weapon breech is closed.

Still another object of the invention is to assure bore safety and a reasonable fuze-arming delay.

With these and other objects in view, as will hereinafter more fully appear, and which will be more particularly pointed out in the appended claims, reference is now made to the following description taken in connection with the accompanying drawings.

BRIEF DESCRIPTION OF THE DRAWINGS

FIG. **1** is a cross-sectional side elevation of a preferred embodiment.

FIG. **2** is a block diagram of a portion of the device shown in FIG. **1**.

FIG. **3** is a block diagram of another portion of the device shown in FIG. **1**.

FIG. **4** is a graph of a voltage waveform usefull in understanding the operation of the preferred embodiment.

DETAILED DESCRIPTION OF THE PREFERRED EMBODIMENT

Referring now to the drawings, there is shown in FIG. **1** a projectile **20** comprising a fin-stabilized HE round fully telescoped within a cartridge case **22**. The interior of the case **22** includes a propellant chamber **23** in communication with a powder-charge cup **24**. An electric primer **25** includes an electrical terminal **30** located in a primer cup **26** at the rear exterior of the case **22**. The primer further includes an electrically insulated feed through that passes through the case **22** and extends into electrical contact with a digital time fuze **28** located in a booster cavity **29** at the rear of the projectile **20**. The cavity **29** also houses a booster charge **32** and a safing and arming (S&A) mechanism **31** with a squib **27** to fire the booster charge **32**. The purpose of the booster charge **32** is to impart a momentary acceleration to the round while not detonating the main charge **48**.

A fin assembly **35**, mounted at the rear of the projectile **20**, has a number of retracted fins **36** that are mounted on pivots **33**. After the projectile **20** is fired and it leaves the gun tube, the retracted fins **36** will rotate on the pivots **33** to extend radially into a position that provides aerodynamic stability to the projectile **20**.

A base-mounted, time fuze in combination with a fully telescoped round of the type disclosed herein is also described in detail in my copending and commonly assigned U.S. patent application, Ser. No. 07/676,610, filed on Mar. 28, 1991, entitled *Electric Fuze with Selectable Modes*, which application is incorporated herein by reference.

A cavity **47**, located in the main body of the projectile **20**, holds the main HE charge **48**. Directly in front of the chamber **47** is a cone-shaped nose **37** that houses a proximity/contact fuze **34**. The forward section **38** houses a high negative-g contact switch **39**, a positive-g enable switch **40** and an antenna **41**. Switch **39** is designed to close in response to negative reaction forces created when the projectile **20** makes impact with a hard target such as the earth, a bridge, a tank, or like object. The positive-g enable switch **40** is designed to be normally open and to be in a closed position only when the projectile **20** is experiencing a positive-g force of sufficent magnitude.

The rear section **44** of the nose **37** houses a proximity fuze circuit **42** and an S&A **43** that, when activated by circuit **42**, causes detonation of the HE charge **48** via a detonator **54**. The switches **39**, **40** and the antenna **41**, electrically connected to the circuit **42**, are imbedded in the section **38** which may be made of molded plastic.

FIG. **2** shows a functional block diagram of the fuze **34**. The fuze circuit **42** includes a reserve power supply **50**, a doppler radar **51**, having an enable gate **55** and an internal R-C timer **56**, and an output circuit **52**. The reserve power supply **50** may be a conventional thermal- or liquid-activated device wherein activation would be initiated by accelerations generated when the projectile **20** is fired. The supply **50** will put out a voltage on the line **53** when it is fully activated.

Any momentary closing of the switch **40** after the power supply **50** is fully active will cause the doppler radar **51** to be enabled via enable gate **55**. When enabled, the radar **51** will begin transmitting and receiving signals via antenna **41** under the power provided by the supply **50** via line **57**. Also, the R-C timer **56** will start charging at this time. It is noted that even though the switch **40** may be momentarily closed during the initial firing of the projectile **20**, the radar **51** will not be enabled at this time because the reserve power supply **50** will not yet be fully active. A short time delay, typically about 50 milliseconds, is normally required before full activation of the reserve power supply **50** is acheived.

An output line from the doppler radar **51** is directed to the output circuit **52** which can provide the necessary input signal to the S&A **43** to operate the detonator **54**. Operation of the detonator **54** via circuit **52** and S&A **43** is also possible upon closure of the contact switch **39**.

FIG. **3** shows a functional block diagram of the digital time fuze **28** and its associated circuitry. The electrical input terminal **30** of primer **25** is connected to one side of a grounded igniter **59** via a blocking diode **58**. The terminal **30** is further connected to one side of a grounded capacitor **60** and the input of a digital data decoder **62** via a blocking diode **67**. The output of the data decoder **62** is connected to one input of a presettable counter **63** which has a second input connected to the output of a frequency scaler **64**. The input of the scaler **64** is connected to the output of an oscillator **65**. A high positive-g enable switch **66** is connected to the oscillator **65**. The output of the counter **63** is connected to the input of the S&A mechanism **31** which, in turn, is outputted to a squib **27** for firing the booster charge **32**.

FIG. **4** shows a typical input pulse train as a voltage vs. time waveform **70** that would be applied by the gunner to the terminal **30** of the primer **25** to fire the projectile **20**. The waveform **70** begins with a positive, relatively long (2 millisecond) power pulse P that is followed by a series of short positive data pulses D and is terminated with a negative, relatively large trigger impulse T. The pulse P is long enough to produce a significant charge on the capacitor **60** to produce the voltage Vcc that is used as a source of power to operate the timer circuit components. As seen in FIG. **3**, the oscillator **65**, scaler **64**, counter **63** and squib **64** are all connected to the voltage source Vcc and use it for operational power.

The series of data pulses D are fed to the decoder **62** which will respond by presetting the counter **63** to a predetermined count that is related to an ignition time which in turn is related to a firing range. The negative impulse T represents a typical trigger pulse for firing igniter **59** via the diode **58** of the primer **25**. The blocking diode **67** will prevent the impulse T from discharging the capacitor **60** and from reaching the input of the decoder **62**. It is noted that the blocking diode **58** blocks the series of positive pulses P, D from reaching the igniter **59** but permits the negative impulse T to fire the igniter **59**. When the igniter **59** is fired, the powder in the powder-charge cup **24** will ignite thereby causing the propellant in the propellant chamber **23** to fire the projectile **20** from the gun (not shown).

The high acceleration of the projectile **20** at firing will close the switch **66** causing the oscillator **65** to output a clock signal that is scaled down by the scaler **64** before it is applied to the counter **63** as an input counting signal. The counter **63** will increment its count in response to the counting signal as the projectile **20** is traveling along its flight path to the target. If and when the counter **63** reaches full count from its preset condition as inputted by the gunner (data pulses D) at firing, the counter **63** will output an arming signal to the S&A **31** that will fire the squib **27** to ignite the booster charge **32**. It is noted that the switch **66** prevents the oscillator **65** from operating until the projectile **20** is underway down the gun tube. This is a safety feature of the system.

Ignition of the booster charge **32** will produce a rearwardly directed thrust from the booster cavity **29** and, therefore, a forward motion to the projectile **20**. This forward motion will cause a sufficent positive acceleration of the projectile **20** to momentarily close the switch **40**, thereby enabling the doppler radar **51** via the enable gate **55**. The self-destruct timer **56** is also activated at this point. In a typical firing situation, the gunner would program the counter **63** such that the radar **51** is enabled about one-quarter second before arriving at the target range.

With the doppler radar **51** operating, radar signals will be transmitted by the antenna **41**. Radar reflections from proximate targets will be received by antenna **41** and fed to radar **51**. Radar **51** will now be in a position to detect any frequency-shifted reflections from proximate targets that have a predetermined relative magnitude. If a proximate target is detected, the radar **51** will input the S&A **43** via the output circuit **52**. At this point, the detonator **54** will ignite the HE charge **48** and function the projectile **20**.

As a self-destruct safety feature, the radar **51**, via timer **56**, will automatically function the projectile **20** if it has not detected a target within a predetermined time

after being enabled. It is also noted that once the reserve power supply **50** is fully active, the projectile **20** will be in a position to function via the switch **39** upon impact with a hard target.

To demonstrate the versatility of the present invention, its operation in a variety of situations will now be described. The projectile **20** may be used in several different roles from a ground position such as from a gun mounted in a mobile, ground combat vehicle. The gunner would condition the projectile **20** to operate in a chosen mode at the time of firing, i.e. when the projectile **20** is in the gun and the breech is locked.

The projectile **20** may be used in an air-defense role by firing it in a ground-to-air (air burst) mode. The gunner would preset the time fuze **28**, via data pulses D, to a time setting which will set off the booster charge **32**, via S&A **31** and squib **27**, just before (one-quarter second) the projectile **20** enters into the target area. The acceleration produced by the initiation of the charge **32** at this time will cause the positive-g switch **40** to momentarily close, thereby enabling the radar **51** at this selected point in the trajectory. Once the projectile **20** closes to within a short distance from the target, the radar **51** will sense the target and detonate the HE charge **48**. In the event the projectile **20** does not pass sufficently close to the target to function the fuze circuit **42** in a predetermined time (typically about one-half second), the internal timer **56** will cause the radar **51** to function the detonator **54** and self-destruct the projectile **20** in flight.

When used in an anti-personnel role, the projectile **20** would be fired in a flat trajectory and conditioned to explode in an air burst at the "optimum" standoff for the intended ground target. In this mode, the gunner will preset the time fuze **28** to a setting which would function the charge **32** at the "optimum" standoff for the intended ground target. The resulting acceleration of the projectile **20** due to the time fuze **28** would, at this point, enable the radar **51** and, due to its close proximity to the earth, would immediately function the fuze circuit **42** and hence the HE charge **48** in an "air burst" mode.

The projectile **20** may also be used in an anti-material role. In this role, the projectile **20** is fired in a flat trajectory and is conditioned to fire on impact. The gunner in this case would provide no time data or would preset the fuze **28** to a setting which is beyond the range of the intended target, and then fire the projectile **20** in a low trajectory directly at the target. Since the fuze **28** will not function before reaching the target, the radar **51** will not be enabled. As such, the fuze circuit **42** will function the projectile **20** in response to the closing of the switch **39** when the target is hit.

As can be seen from the various modes of operation just described, the invention has a multi-mission capability. The single projectile **20** may be used in a ground-to-air mode, a ground-to-ground (air burst) mode and a ground-to-ground (impact) mode. The projectile **20** includes a self-destruct feature in the ground-to-air mode. All fuze settings are accomplished an instant before firing directly through the cartridge case **22**. No penetrations into the HE cavity **47** from the rear, high-pressure area of the projectile **20** are necessary.

Although a preferred embodiment of the present invention has been shown and described in detail herein, many other varied embodiments that incorporate the teachings of the present invention may be easily constructed by those skilled in the art. It is therefore to be understood, that the foregoing disclosure and drawings are merely illustrative of the principles of this invention and are not to be interperted in a limiting sense. It is to be understood that the invention should not be limited to the exact details of construction shown and described because obvious modifications will occur to a person skilled in the art.

What is claimed is:

1. A launchable projectile containing an HE warhead comprising:

a round having a forward section, a base section with a booster cavity therein and an HE cavity located between said sections;

an HE charge positioned in said HE cavity;

a booster charge positioned in said booster cavity;

a time fuze mounted on said base section having means for firing said booster charge a predetermined time period after said warhead is launched; and

a normally disabled proximity fuze mounted on said forward section having enable means for enabling said proximity fuze in response to said firing of said booster charge, a proximity detection means for detecting proximate targets, and a detonator means responsive to said detection means for detonating said HE charge upon the detection of a proximate target by said detection means.

2. The projectile of claim **1** further including a cartridge case and wherein said round is telescoped in said case.

3. The projectile of claim **2** further including a propellant charge positioned in said case and an electric primer means disposed in said case for firing said propellant charge.

4. The projectile of claim **3** wherein said primer means includes an electric circuit means extending from the exterior of said case to said time fuze for inputting time setting information to said time fuze.

5. The projectile of claim **4** wherein said proximity fuze further includes a reserve power supply means for providing power to said proximity fuze responsive to the launch of said warhead.

6. The projectile of claim **5** wherein said proximity detection means is a doppler radar.

7. The projectile of claim **6** further including a contact means responsive to a negative acceleration of said warhead for energizing said detonator means to detonate said HE charge.

8. The projectile of claim **7** wherein said proximity fuze includes a timer means responsive to said firing of said booster charge for energizing said detonator means a predetermined time after said firing of said booster charge.

9. The projectile of claim **8** wherein said time fuze is mounted in s id booster cavity.

10. The projectile of claim **9** wherein said forward section includes a cone-shaped nose.

11. The projectile of claim **10** wherein said enable means includes a positive-g switch means responsive to said firing of said booster charge.

12. The projectile of claim **11** wherein said proximity fuze includes a radar antenna mounted in said cone-shaped nose.

13. The projectile of claim **12** wherein said positive-g switch means and said contact means are mounted in said nose.

14. The projectile of claim **13** wherein said proximity detection means and said detonator means are mounted between said nose and said HE cavity.

* * * * *