US005303635A

United States Patent [19]

Kowalczyk

[11] Patent Number: 5,303,635

[45] Date of Patent: Apr. 19, 1994

[54] APPARATUS AND METHOD FOR ENTRAPPING AND DISCARDING SPENT ARTILLERY SHELLS

[75] Inventor: Ronald B. Kowalczyk, Coeymans Hollow, N.Y.

[73] Assignee: The United States of America as represented by the Secretary of the Army, Washington, D.C.

[21] Appl. No.: 952,381

[22] Filed: Sep. 28, 1992

[51] Int. Cl.[5] F41A 9/56

[52] U.S. Cl. 89/33.4

[58] Field of Search 42/25, 98; 89/33.01, 89/33.05, 33.4, 167, 186

[56] References Cited

U.S. PATENT DOCUMENTS

2,956,480 10/1960 Zouck 89/33.4

4,738,182 4/1988 Nordmann 89/33.4

Primary Examiner—Stephen C. Bentley

Attorney, Agent, or Firm—Anthony T. Lane; Edward Goldberg; Michael C. Sachs

[57] ABSTRACT

The present invention generally relates to a military cannon as typically mounted within the turret of a military armored vehicle such as an armored tank. My invention teaches method and apparatus for the catching and entrapping the stub case typically ejected from the breech of a military cannon after firing of an ammunition round. Subsequent to entrapment of the ejected stub case, the stub case catcher is raised to a preferred elevated angle simultaneously storing potential energy within a torsion bar which upon later release, ejects the entrapped stub case from the catcher and from the vehicle. By use of my invention and an automatic ammunition loader the crew requirements of such fighting vehicles may be reduced by eliminating the need for a human loader.

5 Claims, 10 Drawing Sheets

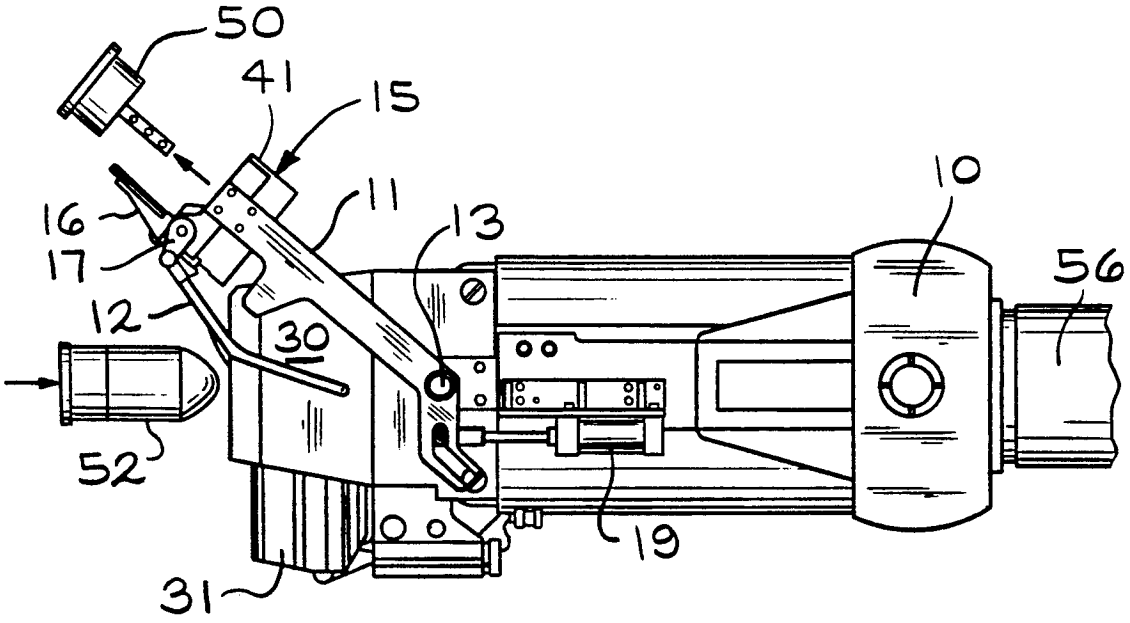

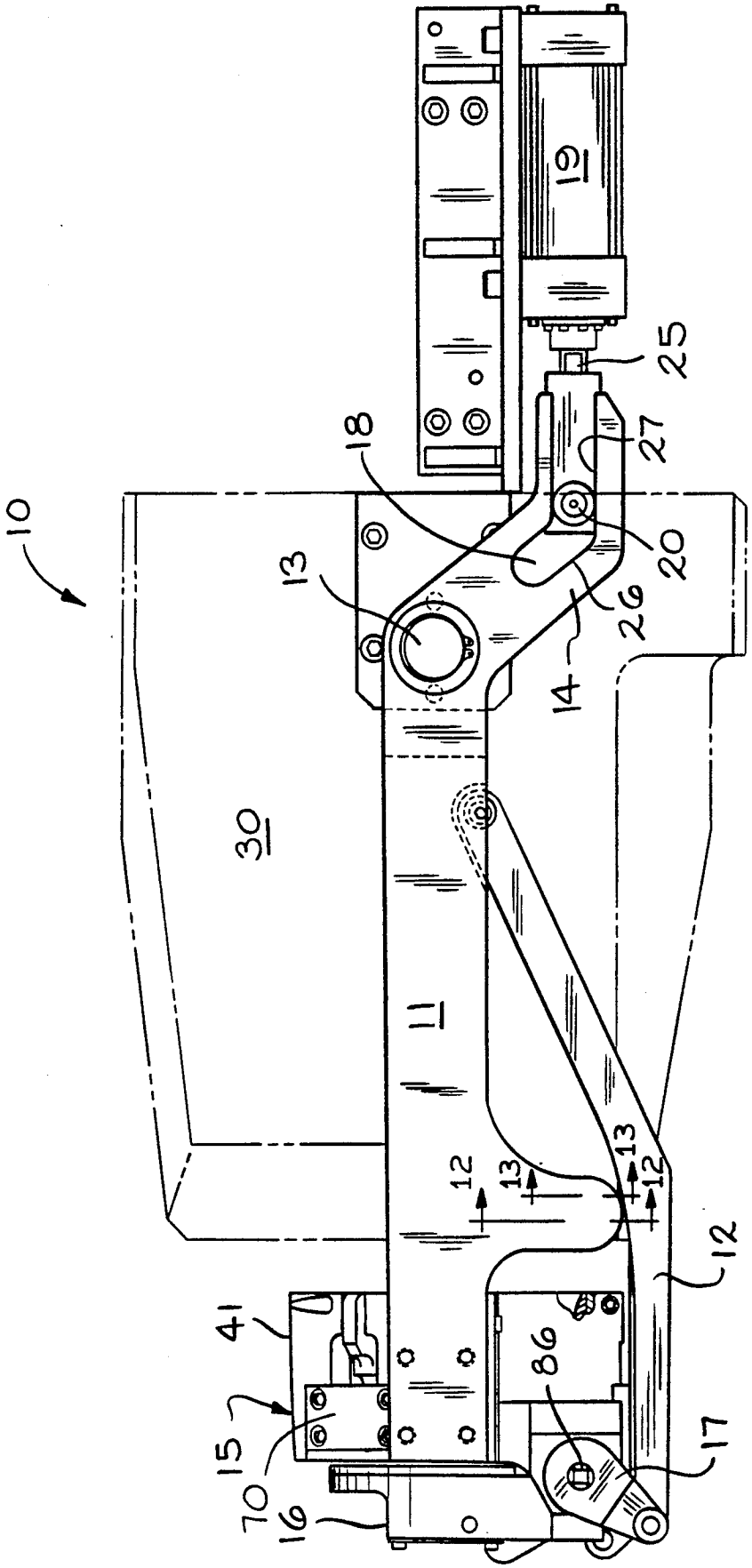

FIG. 1

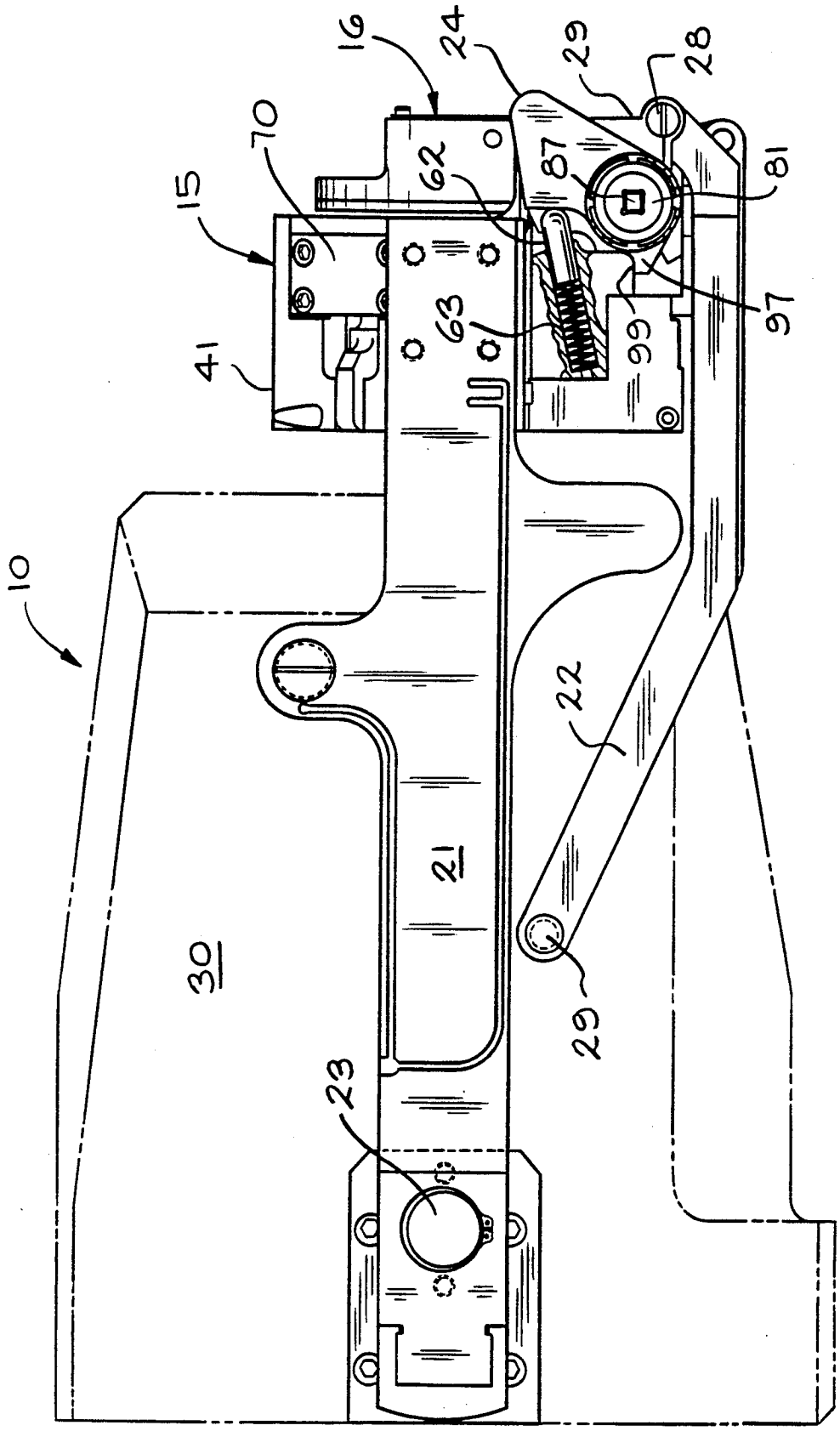

FIG. 2

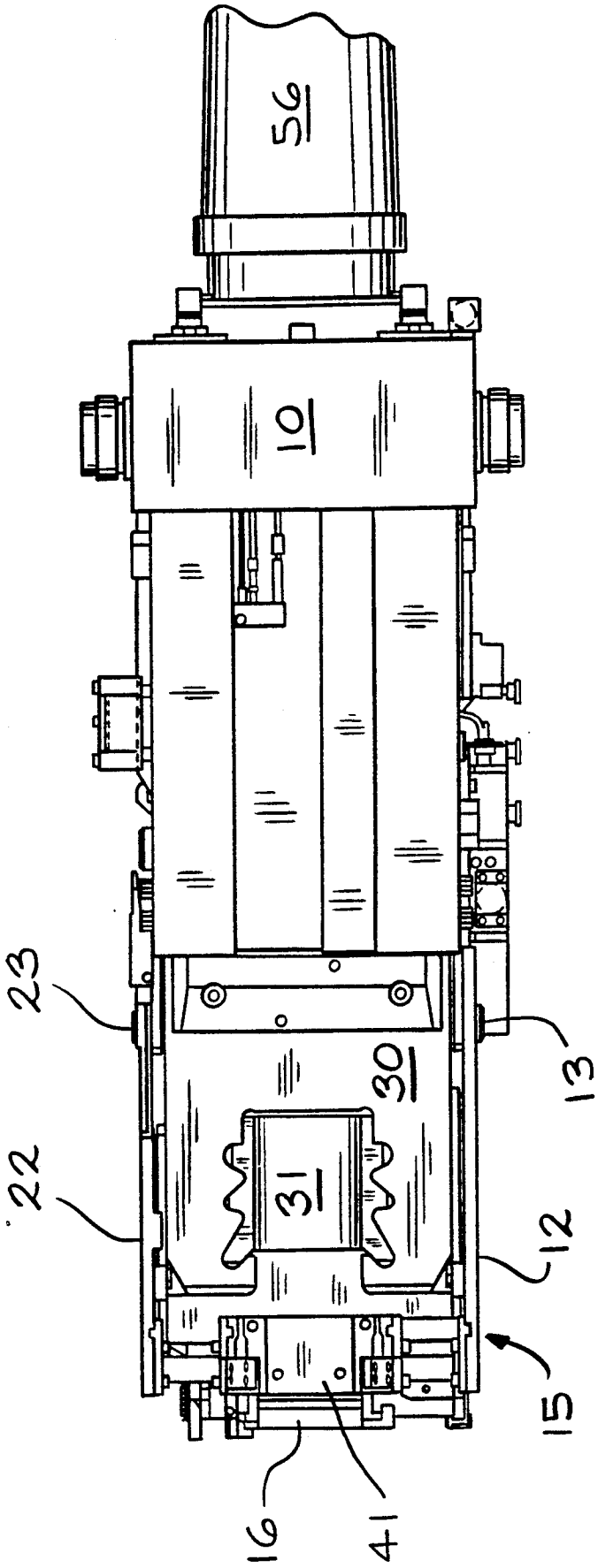

FIG. 3

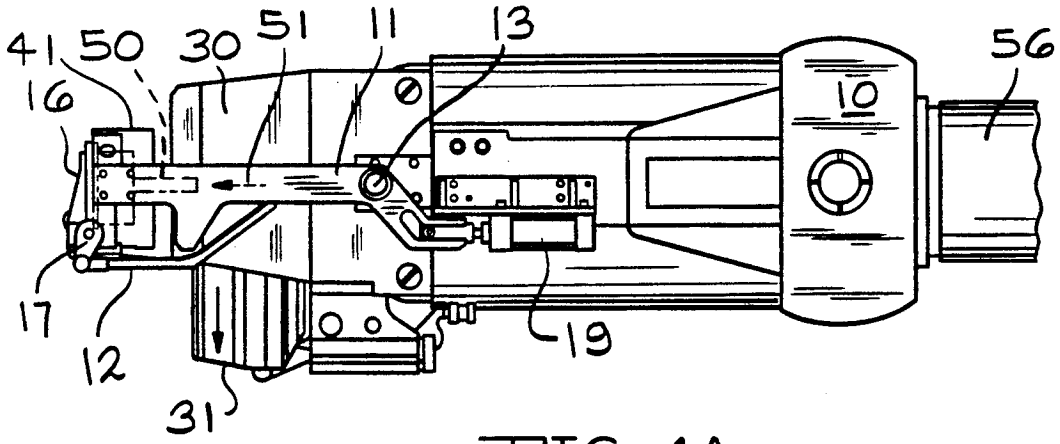

FIG. 4A

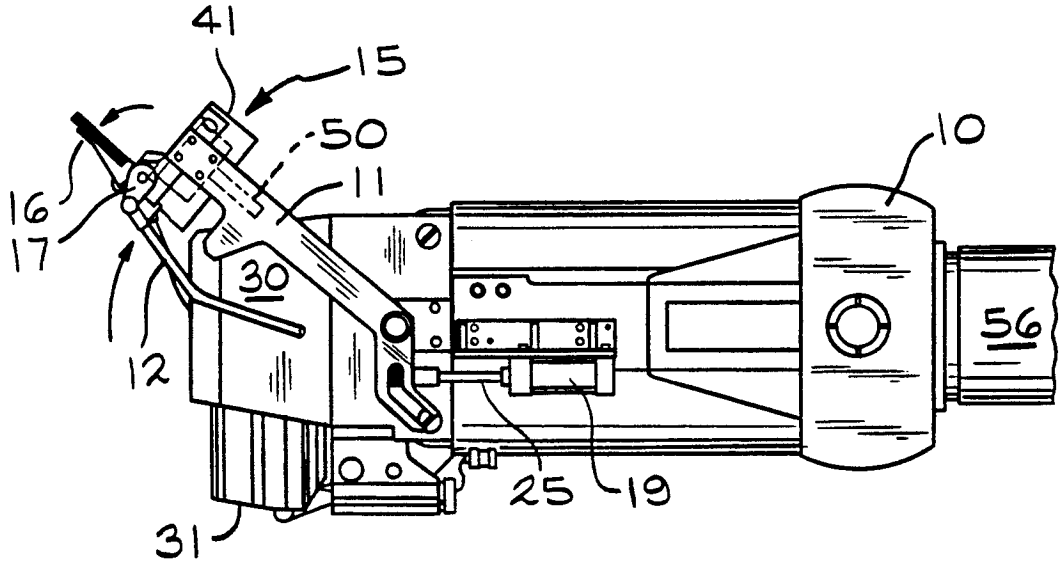

FIG. 4B

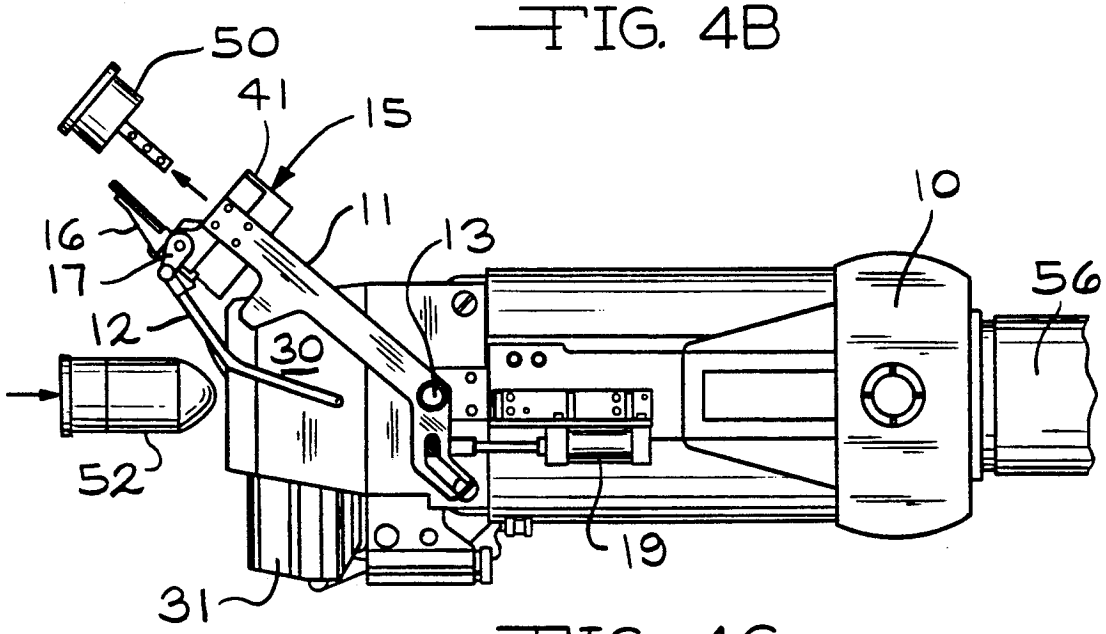

FIG. 4C

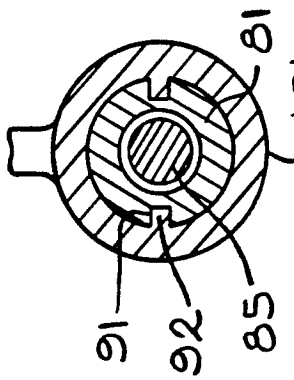
81
101
91
92
85

FIG. 6

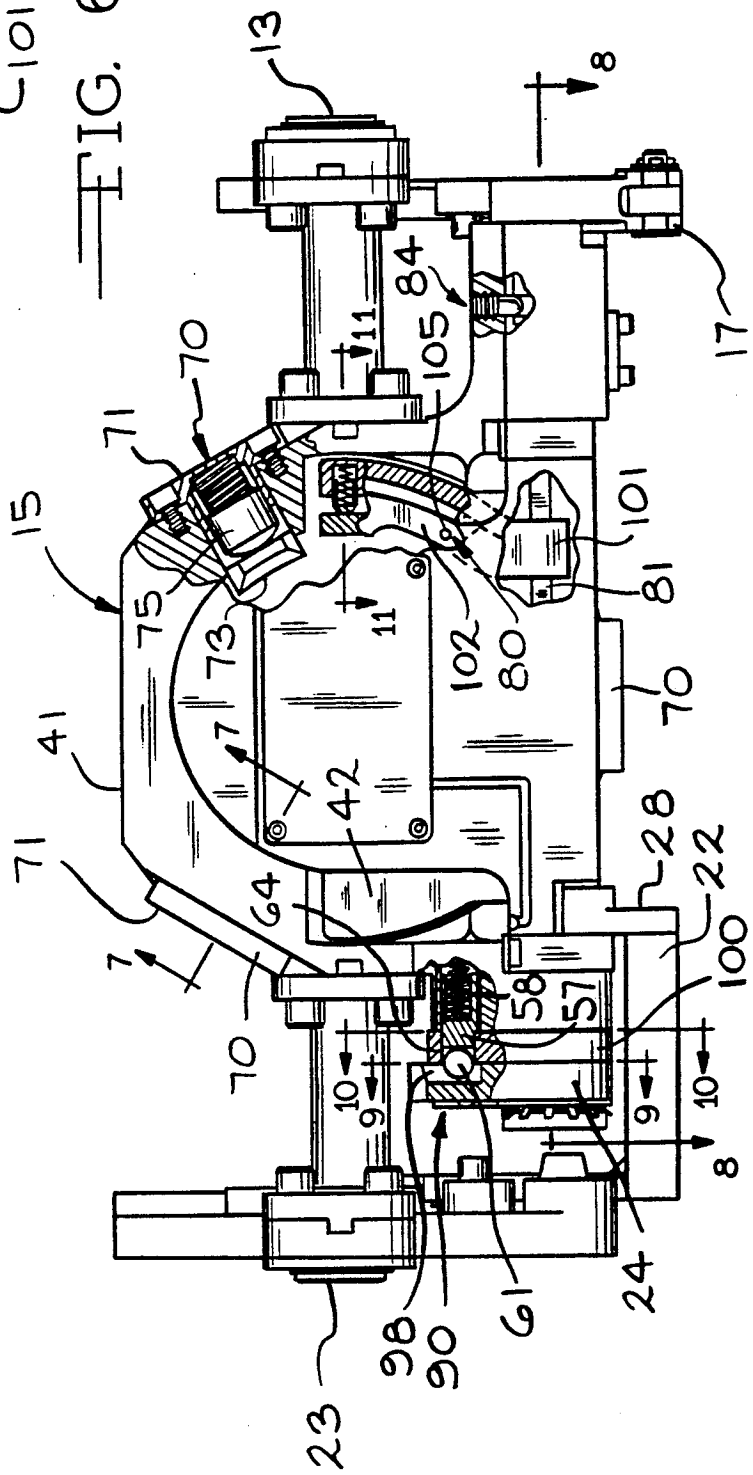
13
8
17
84
11
105
70
71
15
75
73
11
102
80
81
101
70
41
7
42
28
22
71
64
7
70
58
57
100
10
9
9
10
8
24
61
98
90
23

FIG. 5

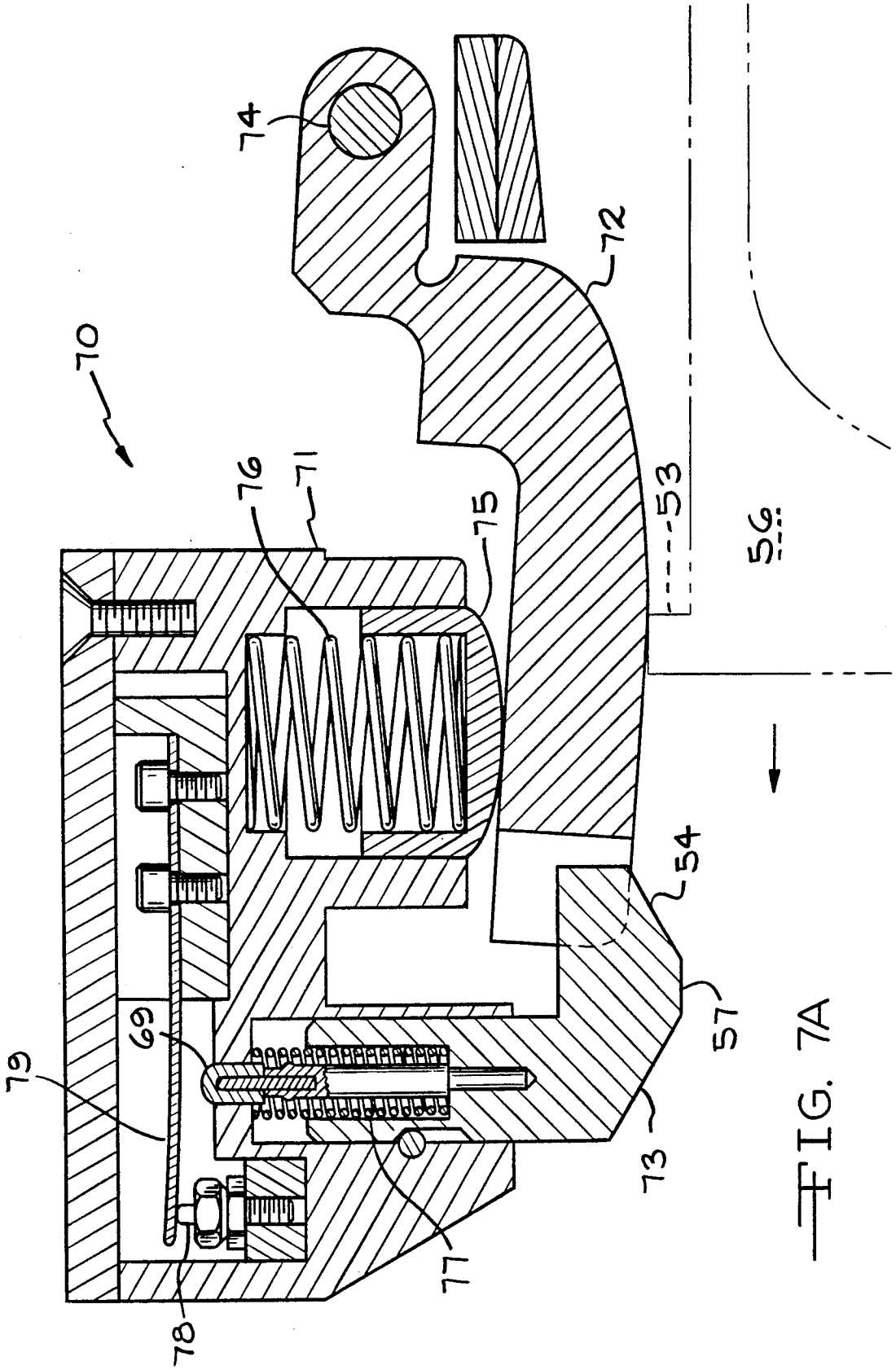

FIG. 7A

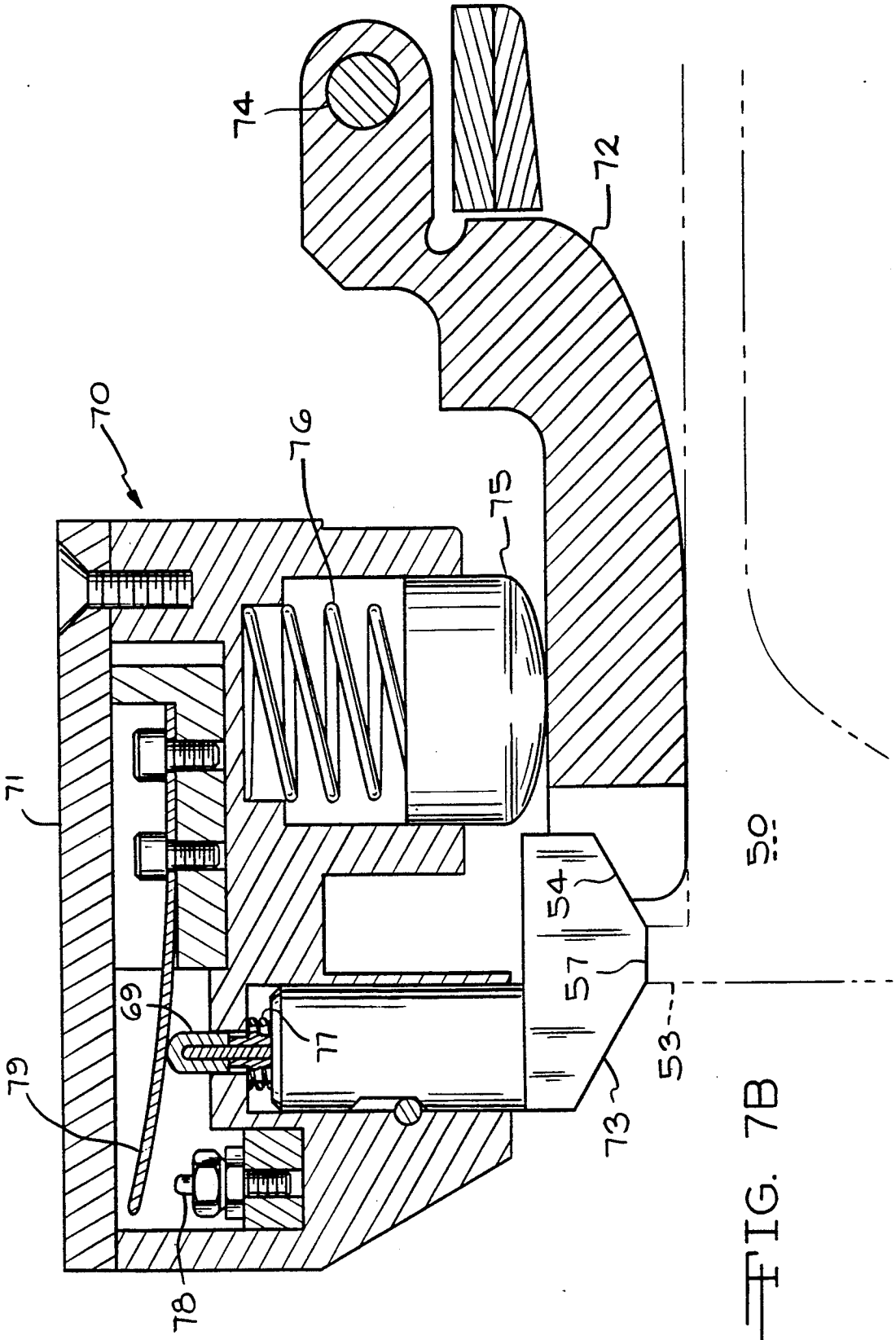

FIG. 7B

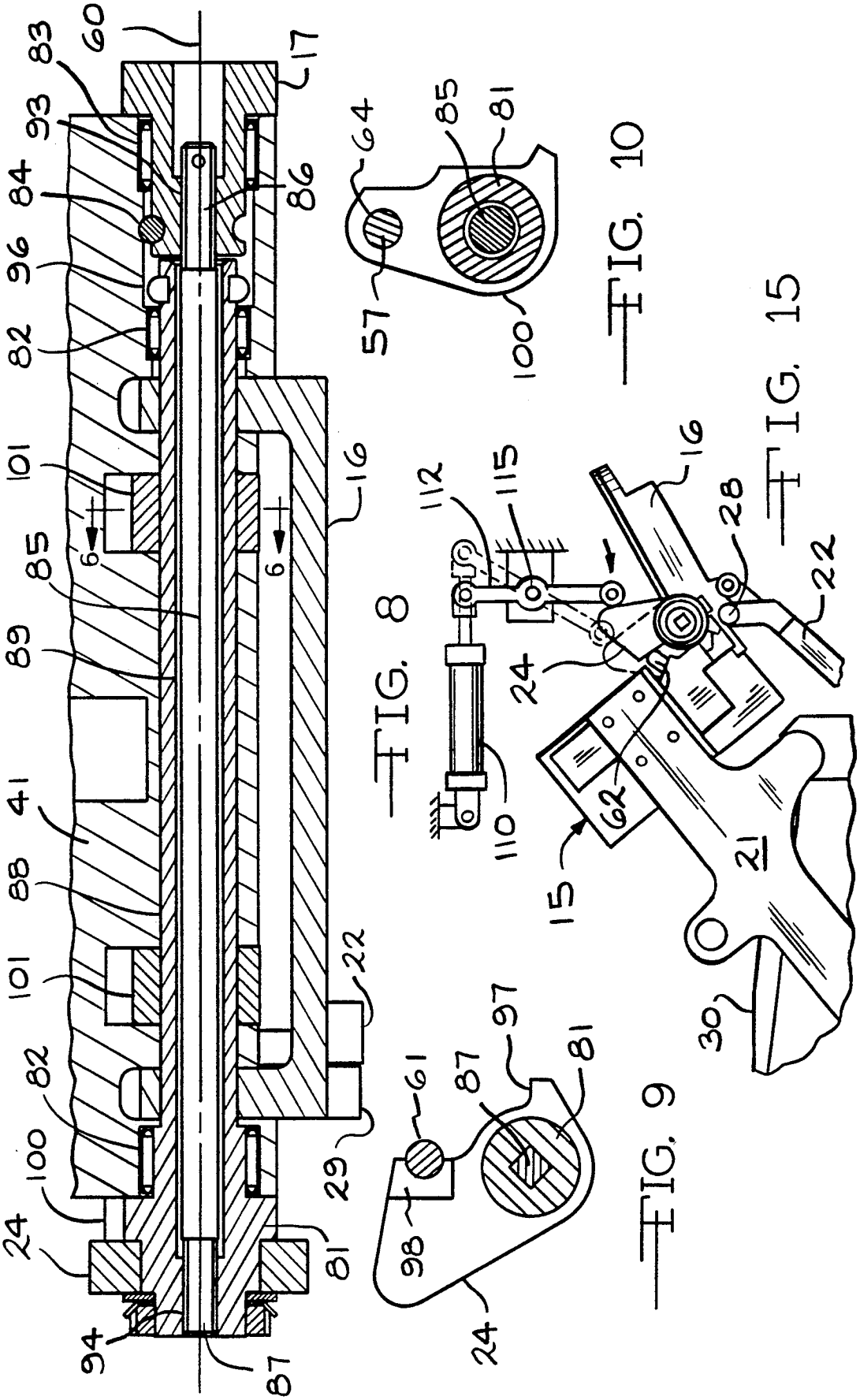

FIG. 8

FIG. 9

FIG. 10

FIG. 15

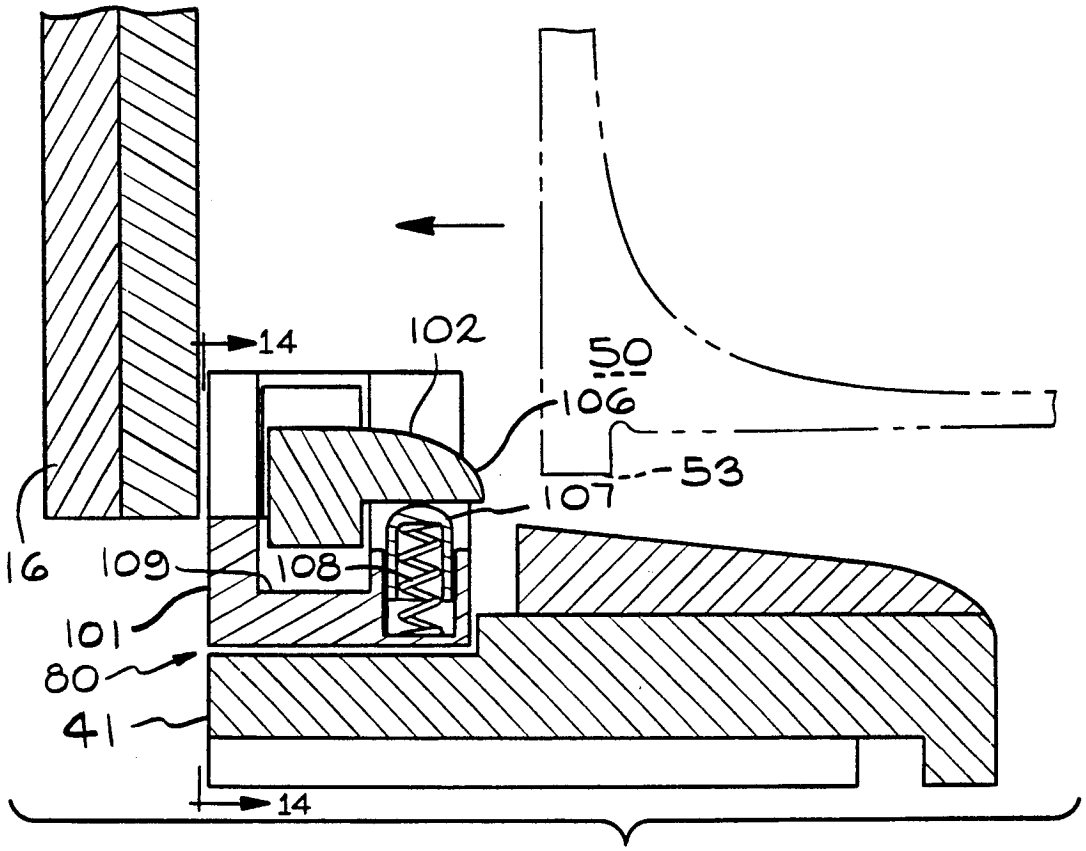

FIG. 11A

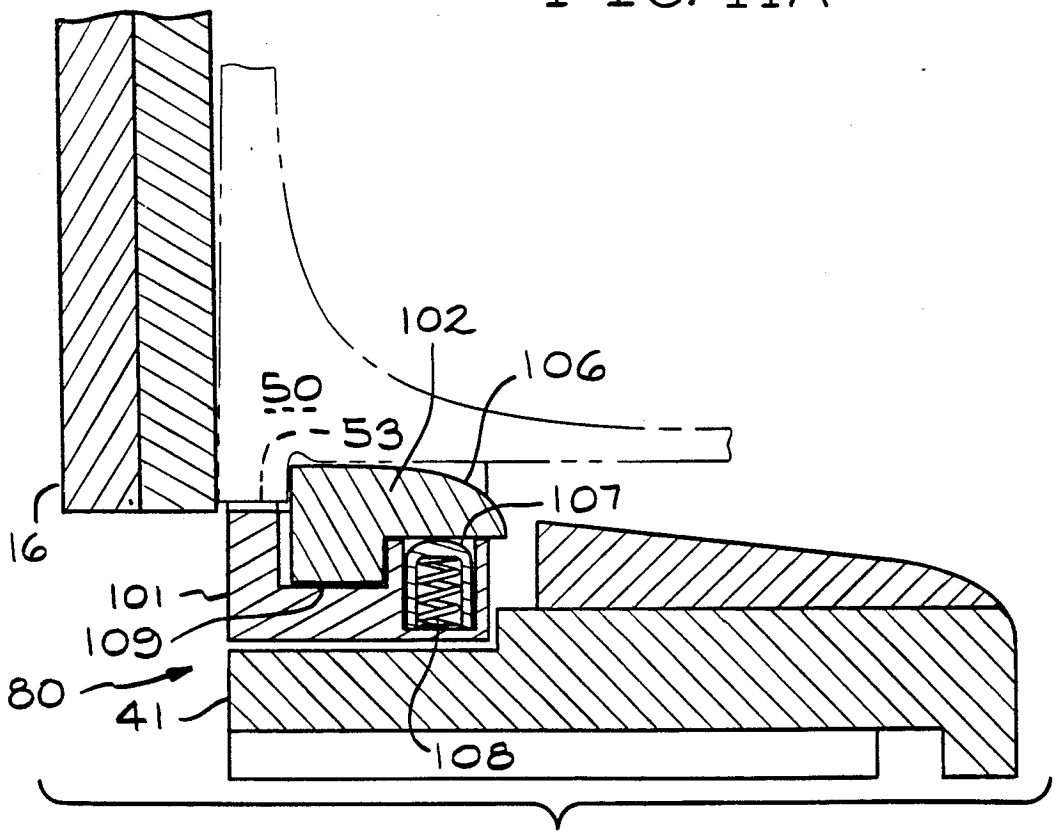

FIG. 11B

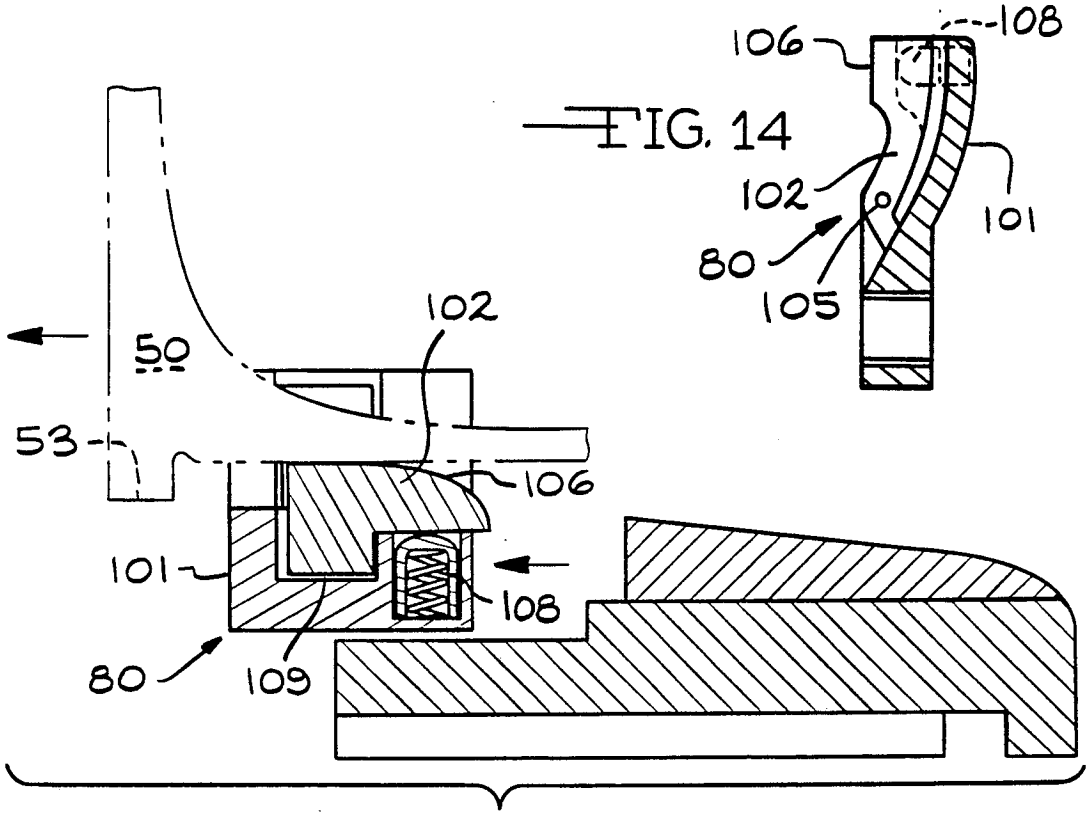

FIG. 14

FIG. 11C

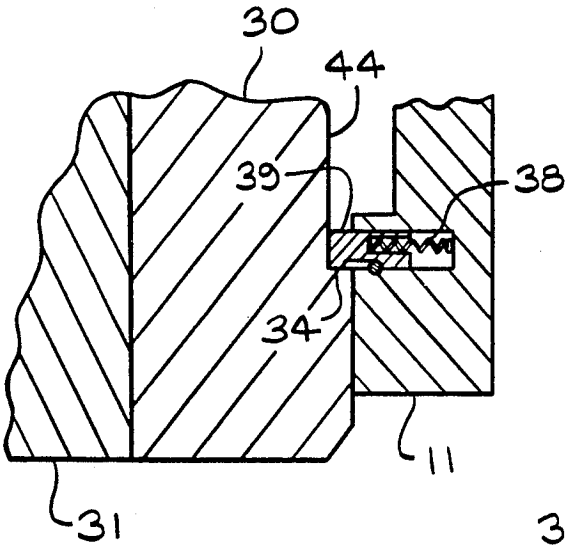

FIG. 12

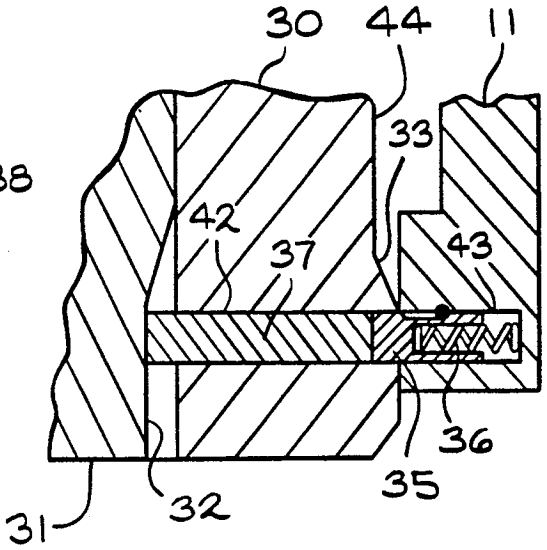

FIG. 13

APPARATUS AND METHOD FOR ENTRAPPING AND DISCARDING SPENT ARTILLERY SHELLS

The invention described herein may be manufactured, used and licensed by or for the Government for Governmental purposes without the payment to me of any royalties thereon.

BACKGROUND OF THE INVENTION

The present invention relates to a military tank/turret weapon system. At the present time a typical military tank combat crew consists of a tank commander, a driver, a gunner and an ammunition loader.

The tank commander is the officer in command of the fighting vehicle and responsible for coordinating the functions and activities of the other crew members to successfully complete the vehicle's assigned mission. The driver is responsible for the operation of the vehicle's engine systems and generally driving or otherwise maneuvering the vehicle. The gunner is responsible for operation of the vehicle's weapon systems, tracking and targeting of enemy vehicles and firing the on board weapon system thereby destroying enemy vehicles. The ammunition loader is responsible for physically selecting the particular type of ammunition ordered by the tank commander to be fired and manually loading the chosen ammunition into the weapon. Upon firing of the round, the round's cartridge case (stub case) is ejected by the weapon's breech mechanism with a force sufficient to propel the stub case toward the rear of the tank turret where it is generally received within a holding container. However, many times the stub case does not land within the holding container and the loader must manually capture the case and deposit it within the holding container. Further as the holding container fills with ejected casings, the loader must dispose of the spent casings by manually tossing the ejected stub cases outside the tank turret.

Future military tank cannon vehicle systems are being designed with a combat crew of three, the commander, driver, and gunner. The ammunition loader being replaced by an automated and mechanical loading device having a high rate of fire otherwise not achievable by a human loader. The stub case ejected from the weapon's breech must now be disposed of mechanically.

SUMMARY OF THE PRESENT INVENTION

The present invention teaches method and apparatus whereby the ammunition stub case, ejected from the breech of a tank turret cannon, may be safely and securely captured and subsequently ejected from the tank turret.

A stub case catcher mechanism is herein taught that receives and traps therein the ejected stub case ejected from the breech of a typical cannon type weapon system. The stub case catcher decelerates the stub case, absorbing it's kinetic energy thereby stopping the stub case and securing it within the catcher. Once secured within the catcher, the catcher is raised to an inclined position from which the stub case may be physically ejected from the tank turret. As the catcher is raised to the ejection position energy is stored within a torsion bar later to be released thereby providing the necessary force and energy for ejecting the stub case from the vehicle.

BRIEF DESCRIPTION OF THE DRAWINGS

FIG. **1** is a right side elevational view of my stub case catcher as typically mounted upon the breech of a military cannon.

FIG. **2** is a left side elevational view of my stub case catcher.

FIG. **3** is a top plan view showing my stub case catcher as attached to a typical weapon system.

FIG. **4A** illustrates my stub case catcher as mounted upon a typical cannon in the weapon firing position and ready to receive the stub case when ejected from the cannon breech.

FIG. **4B** illustrates the stub case catcher in its raised position subsequent to capturing therein a stub case ejected from the cannon breech.

FIG. **4C** illustrates the captured stub case being ejected from the stub case catcher and a new round of ammunition being simultaneously loaded into the cannon breech.

FIG. **5** elevational view of my stub case catcher showing the general cation of various mechanical subassemblies.

FIG. **6** is a sectional view taken along line **6—6** of FIG. **8**.

FIG. **7A** is a cross sectional view taken along line **7—7** of FIG. **5** showing the stub case positioning mechanism prior to receiving therein a stub case ejected from the cannon breech.

FIG. **7B** is a sectional view taken along line **7—7** of FIG. **5** showing the stub case positioning mechanism after having received a stub case therein subsequent to ejection of the stub case from the cannon breech.

FIG. **8** is a cross sectional view taken along line **8—8** of FIG. **5** showing the torsion bar used to store energy for ejecting the captured stub case from the stub case catcher.

FIG. **9** is a cross sectional view as taken along line **9—9** of FIG. **5**.

FIG. **10** is a cross sectional view taken along line **10—10** of FIG. **5**.

FIG. **11A** is a cross sectional view taken along line **11—11** of FIG. **5** showing the stub case entrapment mechanism prior to receiving therein a stub case ejected from the cannon breech.

FIG. **11B** is a cross sectional view taken along line **11—11** of FIG. **5** showing the stub case entrapment mechanism after having captured a stub case therein subsequent to ejection of the stub case from the cannon breech.

FIG. **11C** is a cross sectional view taken along line **11—11** of of FIG. **5** showing the stub case entrapment mechanism ejecting the captured stub case from the catcher.

FIG. **12** is a cross sectional view taken along line **12—12** of FIG. **1**.

FIG. **13** is a cross sectional view taken along line **13—13** of FIG. **1**.

FIG. **14** is an elevational view taken along line **14—14** of FIG. **11A**.

FIG. **15** diagrammatically illustrates one simple mechanism for triggering the catcher's ejection mechanism for ejection of the stub case from the catcher.

DETAILED DESCRIPTION OF THE PREFERRED EMBODIMENT

Referring to FIGS. **1** through **3**, a heavy cannon **10**, as typically used in a modern day military tank, is par-

tially shown having my stub case catcher mechanism **15** installed upon the breech **30** thereof. The catcher **15** basically comprises a trap housing **41** for trapping the stub case therein. The trap housing **41** is supported, to the rear of the breech **30**, by lift arm **11** piviotly affixed to the right side of breech **30** by pivot **13** and locking arm **21** piviotly affixed to the left side of breech **30** by pivot **23**. Lift arm **11**, locking arm **21**, and the centerline of trap assembly **15** are generally aligned with the centerline of barrel **56**. Ejection door **16**, closing off the rear opening of trap housing **41**, is hingedly affixed to the catcher assembly **15** as described below.

Referring now to FIG. **1**, lift arm **11** is provided with an offset camming arm **14** having an offset camming slot **18** therein. Affixed generally to the frame of the weapon is hydraulic lifting cylinder **19** having a cam follower **20** attached to the cylinder's actuation rod **25**. When cylinder **19** is hydraulically pressurized, rod **25** extends rearward (to the left as viewed in FIG. **1**) advancing the cam follower **20** rearwardly into camming slot **18** until engagement with the slanted portion **26** of camming slot **18**. As actuation rod **25** advances further, lift arm **11** is caused to pivot about pivot **13** and rise, as shown in FIG. **4B** and **4C**, thereby elevating catcher **15** above breech **30** thus permitting loading of an ammunition round into the cannon's breech. Similarly, as the activation rod **25** is retracted into cylinder **19** catcher **15** is lowered into alignment with breech **30**. Because of the extremely high "G" loads created by the cannon's recoil action upon firing of a round, it is necessary that cylinder **19** be mounted to the weapon's frame. Thus the horizontal portion **27**, of camming slot **18**, permits axial translation of lift arm **11** with respect to cylinder **19** when cannon **10** recoils.

Referring now to FIG. **2**. Ejection door **16** is provided with pivot **28** axially parallel to and spaced to the rear of the door hinge. Piviotly connected to pivot **28** is door activation link **22** having its opposite end thereof piviotly connected to breech **30** by pivot **29**. As catcher **15** is raised, by action of hydraulic cylinder **19** described above, door link **22** causes clockwise rotation of ejection door **16** about its hinge centerline **60**, thereby opening the rear of trap housing **41**, as seen in FIGS. **4B** and **4C**, thus permitting ejection of the entrapped stub casing therein as will be subsequently described in greater detail below.

Having generally described the primary structure of my stub case catcher and now referring to FIGS. **4A**, **4B**, and **4C**, the overall operational sequence will be described. FIG. **4A** is intended to show my stub case catcher **15** in the weapon firing and stub case receiving position. The center line of catcher **15** is aligned with the weapon's barrel centerline (not shown) and is retained in this position during firing of the ammunition round and the resulting recoil of the weapon. Subsequent to firing of the ammunition round the stub case **50**, shown in silhouette in FIGS. **4A** and **4B**, is ejected rearward from the breech **30**, as depicted by arrow **51** and is caught and mechanically trapped within trap housing **41** as is described in greater detail below. The stub case enters the trap housing **41** with a significant amount of kinetic energy and is stopped by impacting against trap door **16**. The kinetic energy of the stub case is thus absorbed and/or dissipated by transfer of the impacting force through pivot **28** and into door link **22** causing door link **22** to yield thereby absorbing the kinetic energy transfer from the stub case.

After the stub case **50** is secured within trap housing **41** hydraulic cylinder **19** is activated thereby raising catcher **15** to the position as shown in FIG. **4B**. It is preferred that the angle between the catcher centerline and that of gun barrel **56** be within the range of 35 to 45 degrees, and most preferably 40 degrees.

Once catcher **15** is in the raised or eject position, as shown in FIG. **4B**, stub case **50** is ejected from the catcher, through an appropriately aligned and open vehicle hatch (not shown). While in the raised position and before, during or after stub case ejection, a new ammunition round **52** is loaded into the cannon breech **30**, preferably by an automatic ammunition loader. Subsequent to reloading of breech **30** and ejection of stub case **50** from catcher **15**, hydraulic cylinder **19** is reverse activated thereby lowering the stub case catcher **15** to its firing position as shown in FIG. **4A** and the cycle is repeated.

Because of the extremely high "G" loading experienced by cannon **10** during its recoil, it is desirable to rigidly affix the stub case catcher to breech **30** during firing and recoil of the weapon. FIG. **12** shows a cross section of a spring loaded stop pin positioned within the left lift arm **11**. As the catcher is lowered from its raised position (FIG. **4B** and **4C**) into the firing position (FIG. **4A**) stop pin **39**, biased into sliding engagement with the external side wall **44** of breech **30** by compression spring **38**, slides along wall **44** of breech **30** until contact is made with ledge **34** thereby stopping further downward travel of the catcher **15**. Catcher **15** is now in the firing position.

Referring now to FIG. **13**, it is also seen that as catcher **15** is lowered to the firing position, locking pin **35**, also biased into sliding contact with the external wall **44** of breech **30** by compression spring **36**, is caused to cam upon camming surface **33** thereby causing locking pin **35** to retract into bore **43** until aligned with bore **42** of breech **30**. Locking pin **35** is then urged into bore **42** (as shown in FIG. **13**) by action of compression spring **36** thereby locking lift arm **11**, and catcher **15**, to breech **30**.

It is to be appreciated that a similar stop pin and locking pin mechanism is also provided on the left side of breech **30** thereby simultaneously locking lift arm **21** to breech **30**. Thus by action of the two lift arm locking pins and pivots **13** and **23**, catcher **15** is made fast to breech **30** for the recoil portion of the weapon firing sequence.

After the ammunition round is fired from the weapon, breech block **31** retracts downward from the breech (see FIGS. **4A**, **4B**, and **4C**). As seen in FIG. **13** as breech block **31** translates downward camming surface **32** causes release pin **37** to retract into bore **42** thereby forcing locking pin **35** to retract into bore **43** thereby releasing lift arm **11**.

FIG. **5** presents an end elevation of the stub case catcher **15** assembly showing, in partial cutaway, the stub case alignment assembly **70**, the stub case entrapment and ejection assembly **80**, and the stub case ejection release mechanism **90**.

Referring to FIGS. **5**, **7A** and **7B**, the catcher trap housing **41** is provided with three equally spaced stub case alignment mechanisms **70** as shown in FIGS. **7A** and **7B**. The alignment mechanisms **70** comprises a guide shoe **72** pivoted about pivot **74**. Guide shoe **72** is biased radially inward toward the catcher centerline by compression spring **76** urging plunger **75** into contact with the guide shoe. Axially down stream (to the left in

FIG. 7A) from guide shoe **72** is stub case centering cam **73** also biased radially inward toward the catcher centerline by compression spring **77**. As stub case **50** enters the catcher housing **41**, the three equally spaced guide shoes act to center the stub case within the trap housing **41** and align the stub case flange with the entrance ramp **54** of centering cam **73**. As the stub case flange **53** proceeds rearward, stub case flange **53**, acting upon the centering cam ramp **54**, forces the centering cam into it's recess against compression spring **77**. The rearward travel of stub case **50** is ultimately stopped by ejector door **16**, as described above, thereby positioning stub case flange **57** upon centering cam **73** as shown in FIG. 7B. Stub case **50** is now centered within trap housing **41**.

At least one of the three stub case alignment mechanisms further includes an electrical switch to signal a central controller that the stub case is properly positioned within catcher **15**. FIGS. 7A and 7B show an electrical switch comprising a simple cantilevered spring steel switch arm **79** which is in electrical contact with terminal **78**, as shown in FIG. 7A, when no stub case is present within the trap housing **41**. When stub case **50** is positioned within trap housing **41**, as shown in FIG. 7B, plunger assembly **69** acts against switch **79**, breaking the electrical circuit with terminal **78** and thereby providing a signal that the stub case is positioned within the trap housing **41**. By having three such switches it may be easily determined if the stub case is properly positioned for ejection or askew.

Referring now to FIG. **8** presenting a cross sectional view as taken along line **8**—**8** of FIG. **5** showing the torque transfer shaft **81** which also acts as the hinge for rotation of ejection door **16** about door hinge center line **60**. Transfer shaft **81** is journaled within bore **88**, passing through trap housing **41**, by bearings **82** positioned at each end thereof. Ejection door **16** is hinged about the torque transfer shaft **81** as shown in FIG. **8**. Passing through bore **89** of torque transfer shaft **81** is torsion bar **85** having square end zones **86** and **87**. Square end zones **86** and **87** are received within square bores **93** and **94** within torsion arm **17** and the torque transfer shaft **81** as shown in FIG. **8**. Torsion arm **17** is received within bearing **83**, as shown in FIG. **8** and is retained within bore **96** by action of retention pin **84**; thus torsion bar **85** is free to thermally expand and contract in the axial direction.

It can now be appreciated that as the stub case catcher **15** is raised from the firing position, as shown in FIG. 4A, to the stub case rejection position, as shown in FIG. 4B by action of hydraulic cylinder **19**, torsion bar **85** is torqued or twisted in the counter clockwise direction, as viewed in FIGS. **1**, 4A, 4B, and 4C by action of the square ends **86** and **87** and torsion link **12**, thereby storing potential energy therein. The square end **87** of torsion bar **85** and torque transfer shaft **81** are restricted from rotation as will be described below.

Referring now to FIGS. **2**, **5**, **8**, **9** and **10**, rotatably positioned upon the end of the torque transfer shaft **81** is trip cam **24** biased clockwise, as viewed in FIG. **2**, by pin **62** and compression spring **63** within a convenient bore within trap housing **41**. Maximum clockwise travel of trip cam **24** is checked by the action of tang **97** acting upon abutment **99** of trap housing **41**. Trip cam **24** is free to rotate about the torque transfer shaft **81** and serves to release stored energy within torsion bar **85** for ejection of stub case **50** from catcher **15** as will be further described below.

Machined into the torque transfer shaft **81**, as an integral part thereof and juxtaposed to trip cam **24**, is torque release arm **100**. Within the extended portion of torque release arm **100** is a cylindrical aperture **101** receiving therein plunger **57** biased to to the left, as viewed in FIG. **5**, by compression spring **58** both of which are positioned within an appropriate bore within trap housing **41**. Positioned axially in line with plunger **57** is camming ball **61** which is in rolling contact with cam surface **98** of trip cam **24**. It can be appreciated, by reference to the figures, that as trip cam **24** is made to rotate counterclockwise, as viewed in FIG. **2**, that camming ball **61** is thereby driven axially into aperture **64** driving plunger **57** axially into its bore. When the axial end of plunger **57** aligns with the surface or face of torque release arm **100** the torque release arm **100** is free to rotate relative to the trap housing **41** and trip cam **24**. Thus torsion bar **85** is freed to rotate about its axis **60**. By this release mechanism the energy stored within torsion bar **85** by raising the catcher **15** to its raised position, as shown in FIG. 4B may be released causing clockwise rotation of torque transfer shaft **81** as viewed in FIG. **2**. This clockwise rotation of torque transfer shaft provides the motive force for ejection of the stub case as will be described below.

Referring now to FIGS. **5**, **6**, **8**, **11A** through **11C** and **14** showing details of the preferred stub case ejector mechanism **80**. Ejector arm **101** is attached to the torque transfer shaft **81** by means of splines **92** projecting into groove **91** of torque transfer shaft **81** as shown in FIG. **6**. Pivotly attached to ejector arm **101** by pivot **105** is ejector pawl **102** having a camming profile **106**, best shown in FIG. **11A** through **11C**. Pawl **102** is biased radially inward, toward the weapon center line by compression spring **108** acting upon cap **107**.

After firing of the ammunition round and ejection of stub case **50** from breech **30**, stub case **50** enters catcher **15** and is centered by action of the stub case alignment mechanisms **70** as described above. Stub case **50** progresses rearward over the pawl camming profile **106** thereby forcing pawl **102** to retract, against the force of compression spring **108**, into offset **109** of ejector arm **101** thereby permitting passage of flange **53**. After passage of flange **53**, compression spring **108**, in combination with cap **107**, causes pawl **102** to entrap the stub case **50** between pawl **102** and ejector door **16** as shown in FIG. **11B**.

As catcher **15** is raised into the ejection position (FIG. 4B) torsion bar **85** is twisted thereby storing potential energy therein as described above. Upon release of torque transfer shaft **81** by action of trip cam **24**, as described above, the potential energy stored within torsion bar **85** is transferred to torque transfer shaft **81** through square end **87** thereby causing the torque transfer shaft **81** to suddenly rotate counter clockwise, as viewed in FIGS. **9** and **10**. As shown in FIG. **11C** ejector arm **101** is thus caused to rotate in unison with the torque transfer shaft **81**, to the left as viewed in FIG. **11C**, thereby ejecting stub case **50** from catcher **15**.

FIG. **15** illustrates a simple linkage mechanism for the activation of trip cam **24**. Cylinder **110** affixed to the roof of the tank turret (not shown) is hydraulically activated thereby causing link **112** to pivot clockwise about pivot **115** thus rotating trip cam **24** counter clockwise thereby releasing the torque transfer shaft **81**, as described above, resulting in ejection of the stub case trapped within the catcher as described immediately above.

In accordance with the provisions of the patent statutes, the principle and mode of operation of the invention have been illustrated and described in what is considered to represent its preferred embodiment. However, it should be understood that the invention can be practiced otherwise than as specifically illustrated and described without departing from its spirit or scope.

I claim:

1. In a military cannon wherein an ammunition stub case is ejected from the breech of said cannon after firing of an ammunition round, apparatus for capturing said stub case comprising:

a) main body means having a hollow cavity for receiving said stub case therein, said cavity having an axial centerline and opposite first and second openings at each end thereof, said hollow cavity centerline being axially aligned with the center line of said cannon whereby said first opening is adjacent the breech of said cannon,

b) door means closing off the second opening of said hollow cavity,

c) means within said hollow cavity for centering said stub case within said hollow cavity such that the axial center line of said stub case is coincident with the extended axial center line of said cannon, wherein said means for centering said stub case within said hollow cavity includes sensing means whereby the relative position of said stub case center line with respect to the center line of said cavity may be determined,

d) means for securing said stub case within said hollow cavity,

e) means for elevating said main body means at an angle of inclination with respect to the axial centerline of said cannon,

f) means for ejecting said stub case from said hollow cavity when said main body is at said angle of inclination.

2. The apparatus as claimed in claim 1 wherein said sensing means includes means whereby the relationship of said stub case center line with respect to said cavity center line may be signaled to the weapon control means.

3. In a military cannon wherein an ammunition stub case is ejected from the breech of said cannon after firing of an ammunition round, apparatus for capturing said stub case comprising:

a) main body means having a hollow cavity for receiving said stub case therein, said cavity having an axial centerline and opposite first and second openings at each end thereof, said hollow cavity centerline being axially aligned with the center line of said cannon whereby said first opening is adjacent the breech of said cannon,

b) door means closing off the second opening of said hollow cavity,

c) means within said hollow cavity for centering said stub case within said hollow cavity such that the axial center line of said stub case is coincident with the extended axial center line of said cannon,

d) means for securing said stub case within said hollow cavity,

e) means for elevating said main body means at an angle of inclination with respect to the axial centerline of said cannon,

f) means for ejecting said stub case from said hollow cavity when said main body is at said angle of inclination, said means for ejecting comprising means for storing the energy required to eject said stub case, said energy being imparted to said energy storage means by action of said main body rising to said inclined position.

4. The apparatus as claimed in claim 3 wherein said energy storage means includes a torsion bar mechanically linked to said stub case ejection means.

5. The apparatus as claimed in claim 4 wherein said torsion bar is orthogonal to said cannon center line, releasably fixed to said main body at one end thereof and having mechanical linkage means between the opposite end thereof and the breech of said cannon.

* * * * *