US005578275A

United States Patent [19]

Rosenberg et al.

[11] **Patent Number: 5,578,275**

[45] **Date of Patent: Nov. 26, 1996**

[54] **IN-LINE SAMPLING WITH CONTINUOUS FLUSHING FOR FRICTION SENSITIVE LIQUID NITRATE ESTER COMPOSITIONS**

[75] Inventors: **Steven J. Rosenberg**, Flanders; **Shpend Ismaili**, Hasbrouck Hts., both of N.J.; **Eldon K. Hurley**, Wilmington, Del.; **Thomas H. Langford**, Salisburg, N.C.

[73] Assignee: **The United States of America as represented by the Secretary of the Army**, Washington, D.C.

[21] Appl. No.: **390,458**

[22] Filed: **Feb. 16, 1995**

[51] **Int. Cl.**[6] **B01F 7/08**

[52] **U.S. Cl.** **422/163**; 422/100; 73/863.41; 147/2; 147/109.6

[58] **Field of Search** 422/163, 100; 73/863.41, 35; 149/109.6, 2

[56] **References Cited**

U.S. PATENT DOCUMENTS

2,368,638	2/1945	Bryce et al.	422/163
4,472,215	9/1984	Binet et al.	149/109.6
4,767,476	8/1988	Jürgen	149/109.6
5,143,699	9/1992	Herter	422/163

Primary Examiner—Nina Bhat
Attorney, Agent, or Firm—Saul Elbaum; Edward Goldberg; John E. Callaghan

[57] **ABSTRACT**

A sampling system with a remotely operable, in-line sampler with continuous flow of sample flush water is described. The device is used in the production of friction sensitive liquid nitrate esters, particularly nitroglycerin and diethylene glycol dinitrate.

11 Claims, 8 Drawing Sheets

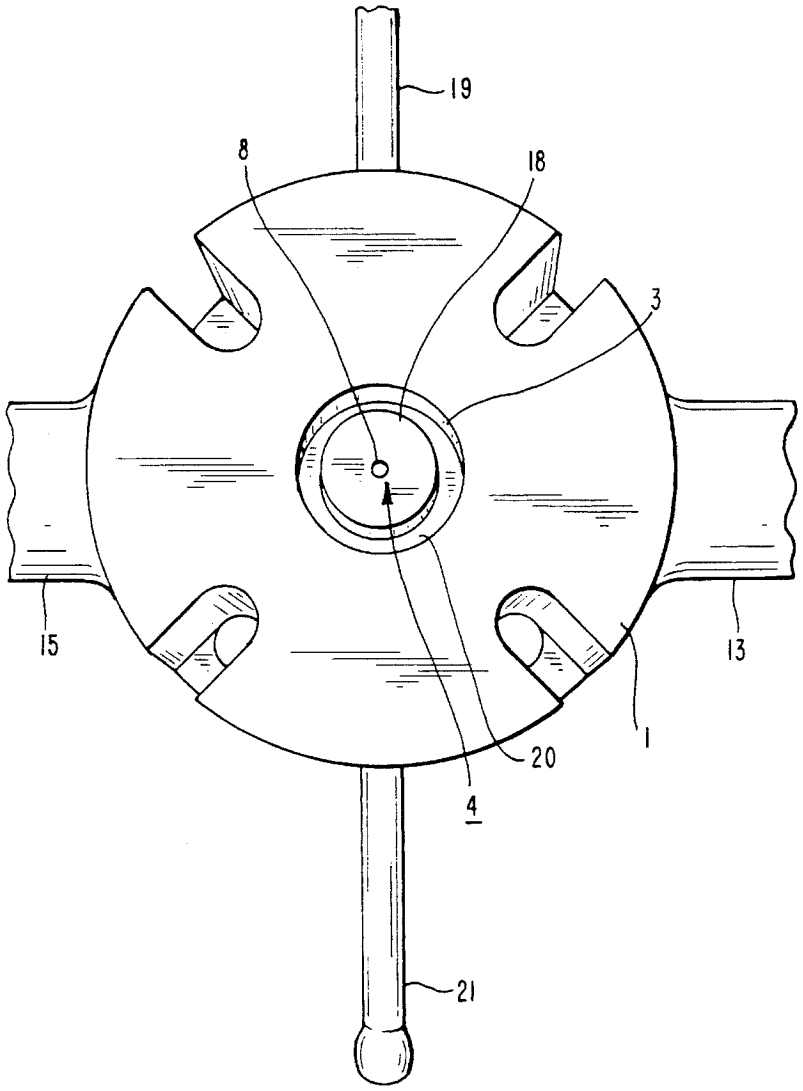

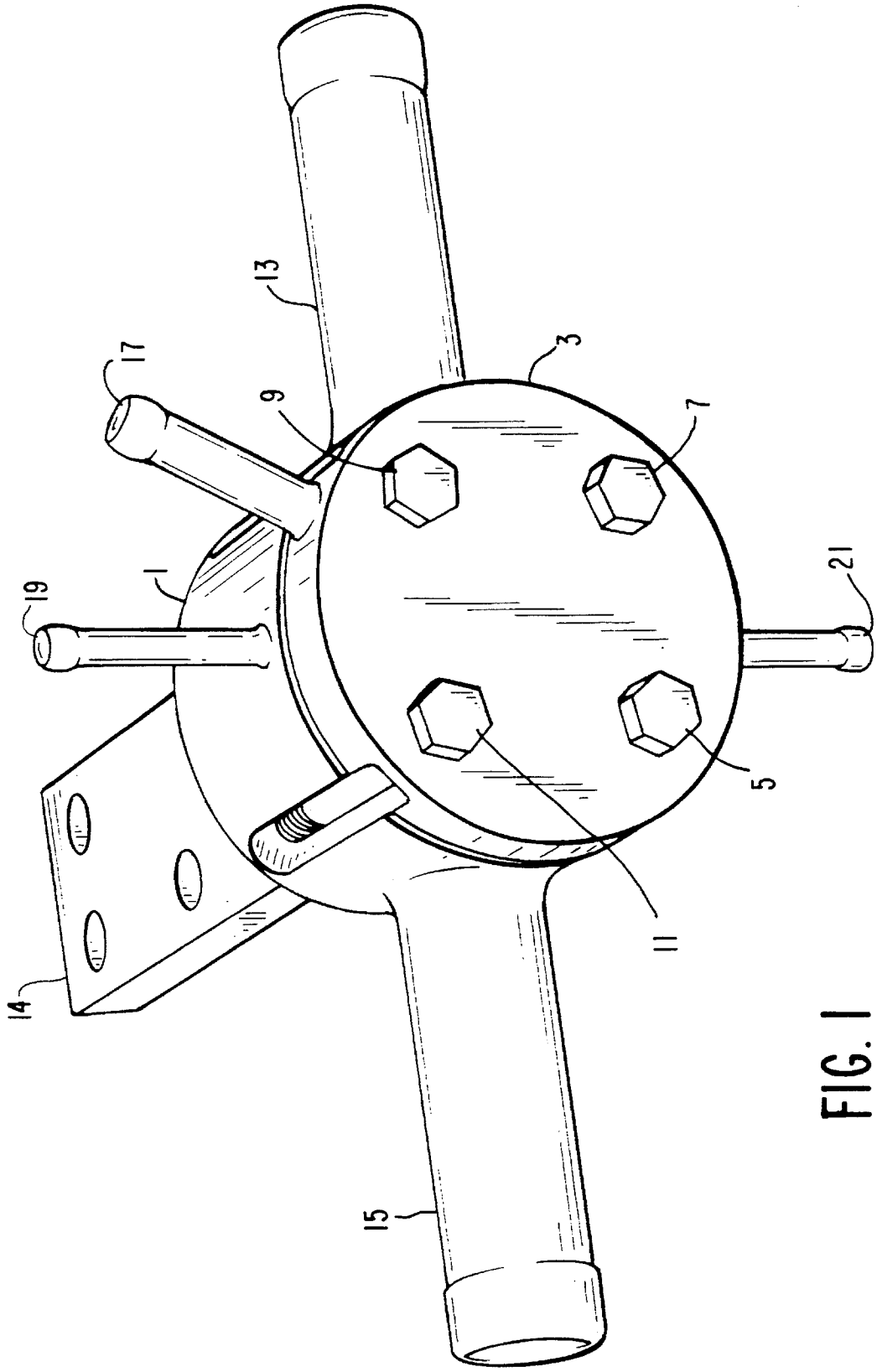

FIG. 1

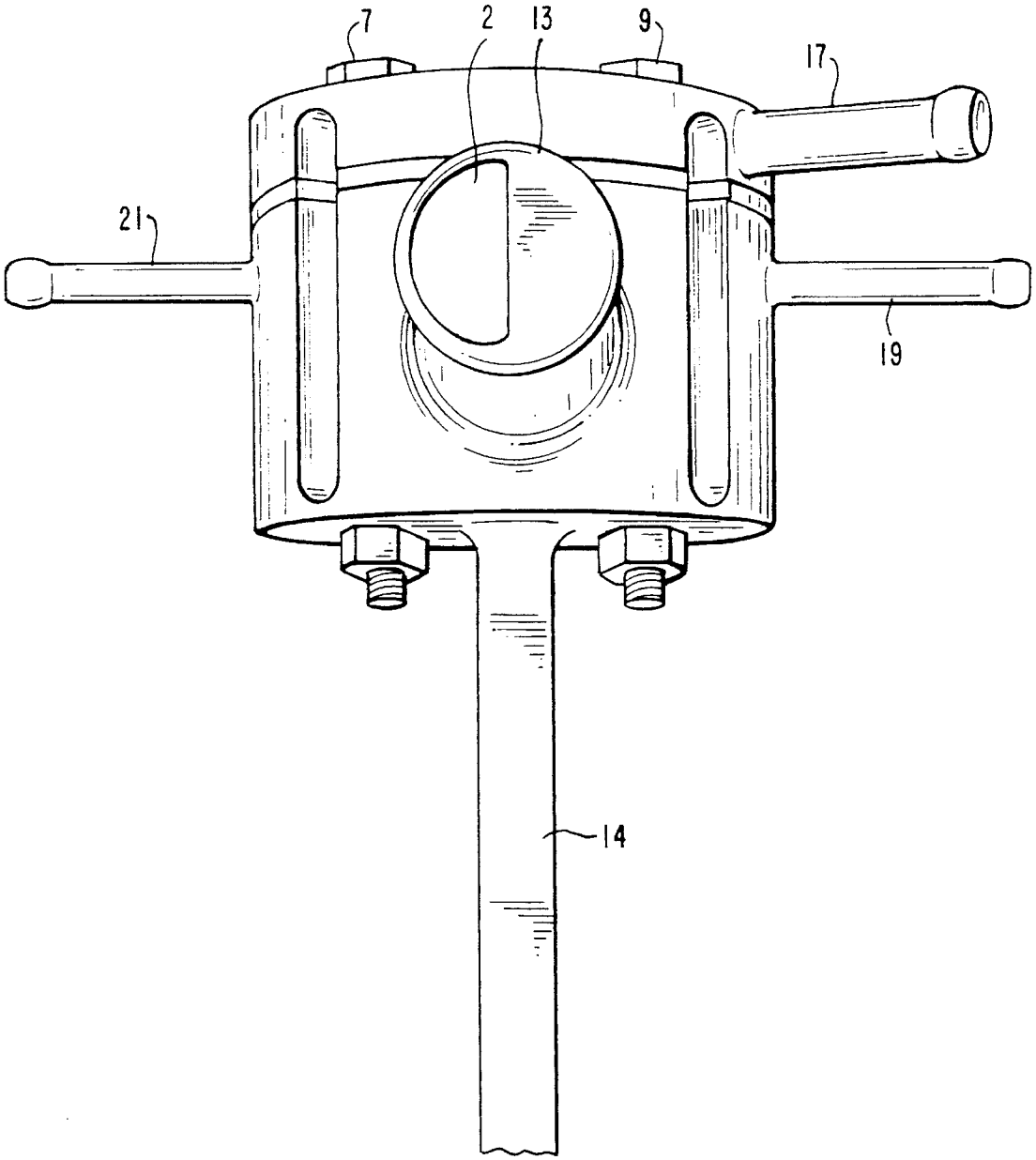

FIG. 2

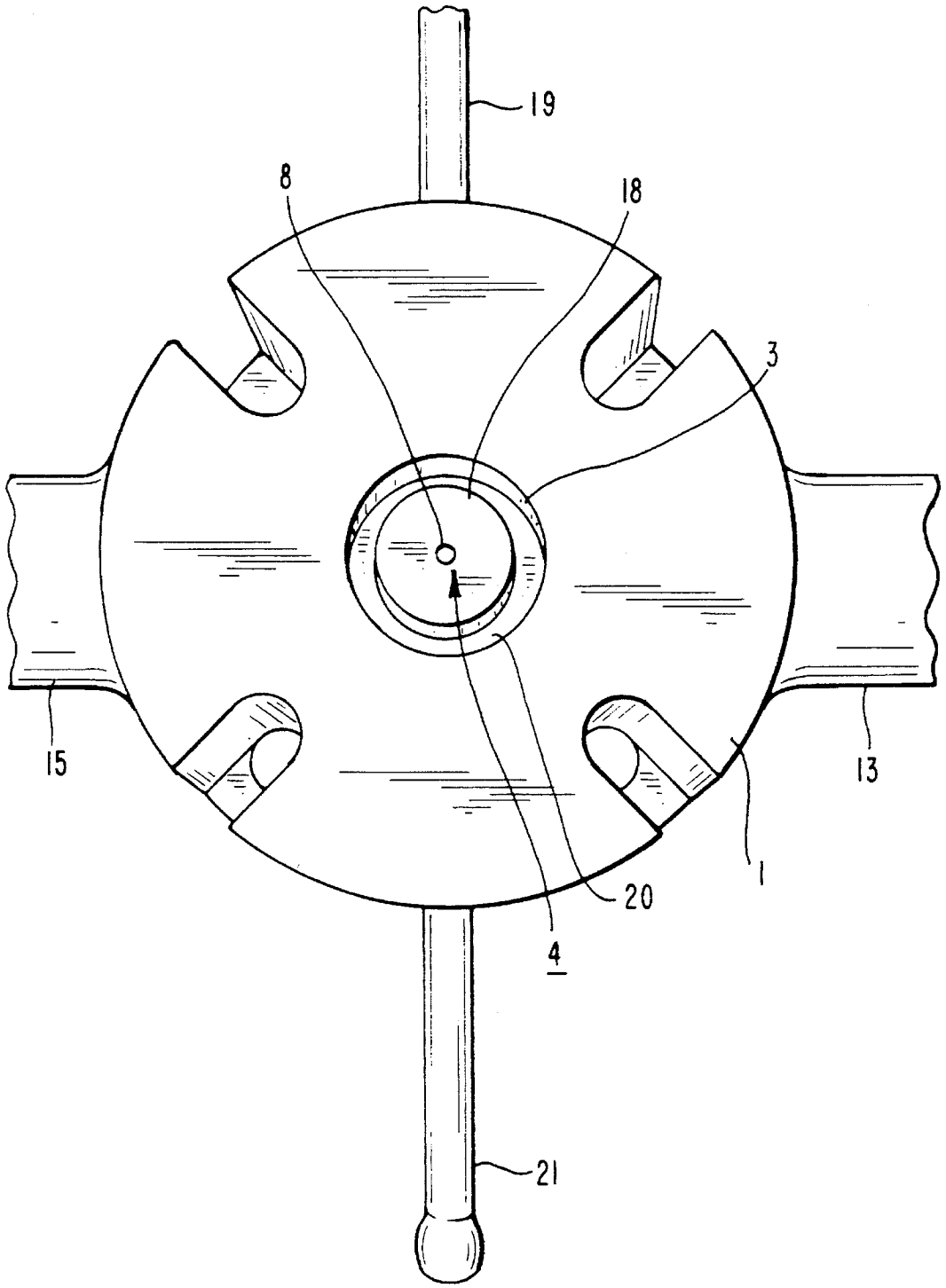

FIG. 3

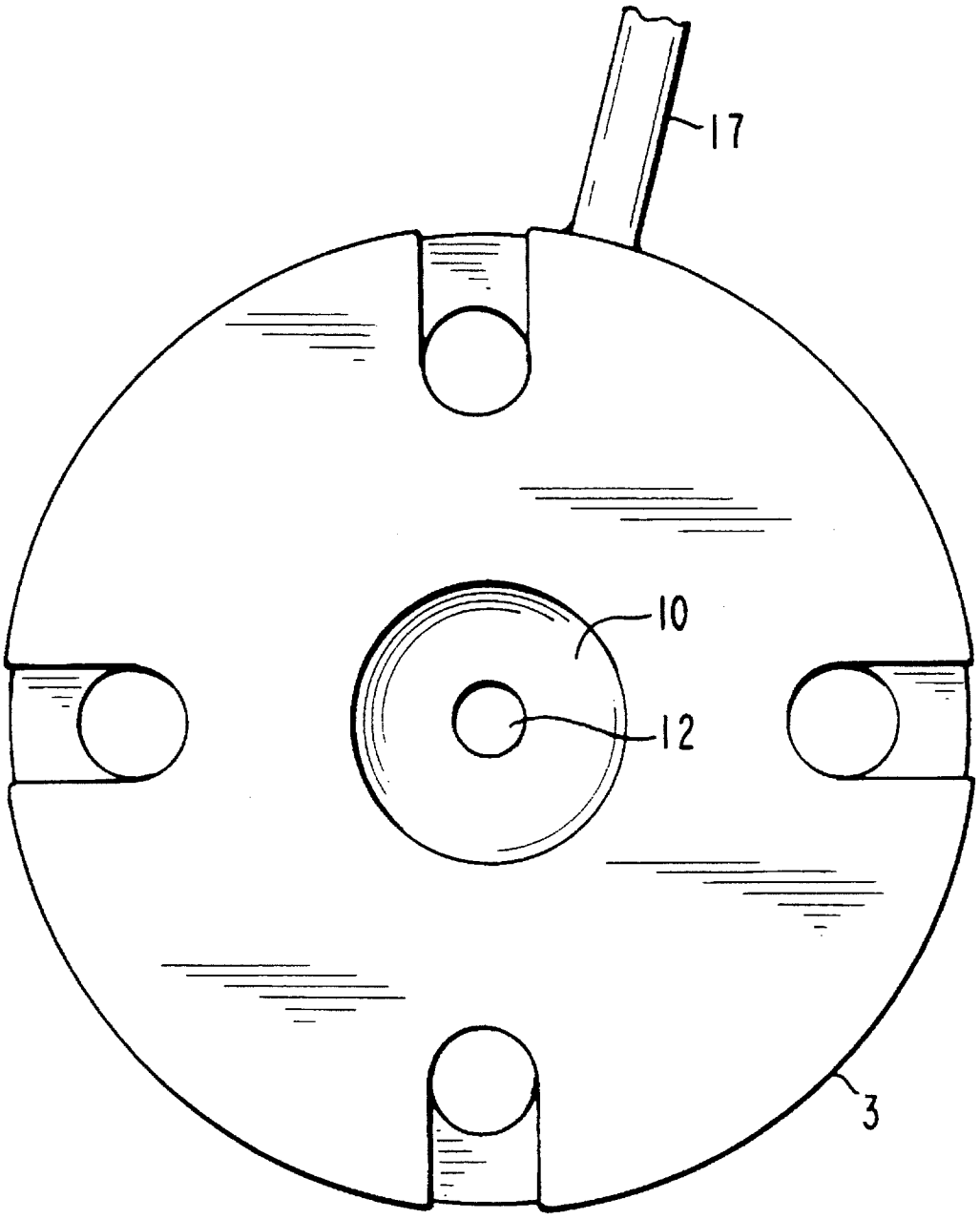

FIG. 4

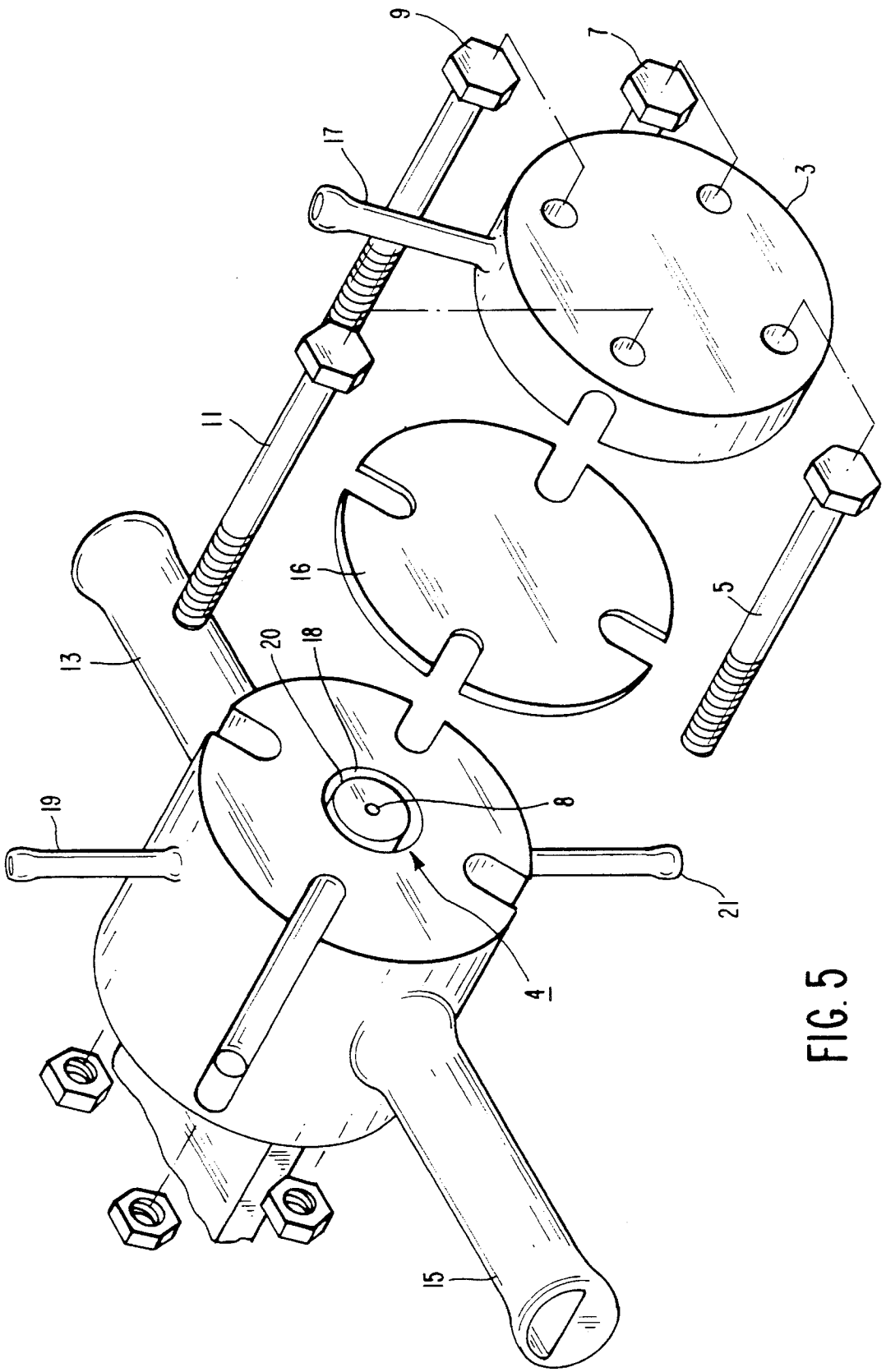

FIG. 5

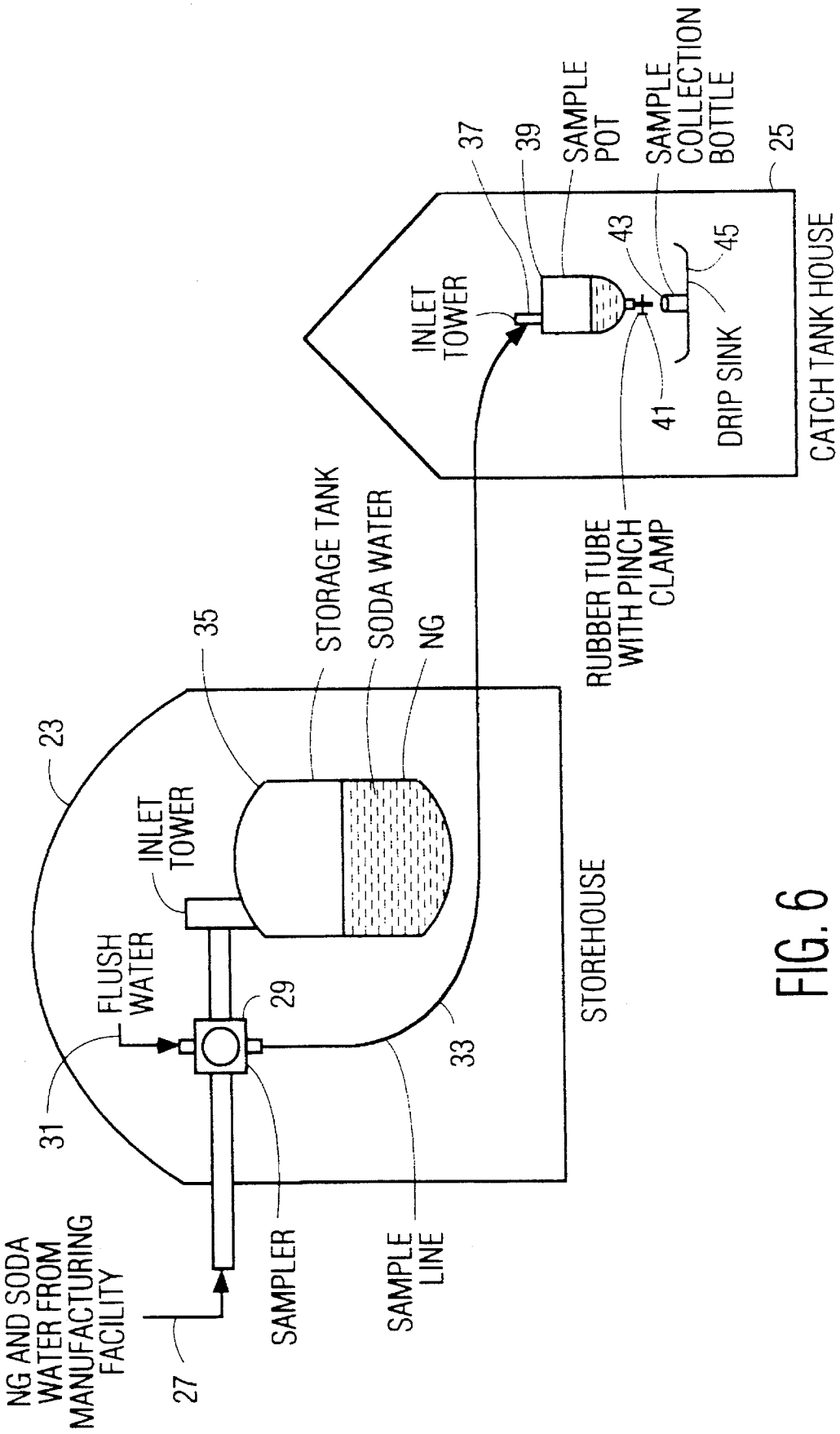
NG AND SODA WATER FROM MANUFACTURING FACILITY
27
SAMPLER
SAMPLE LINE
31
FLUSH WATER
29
INLET TOWER
23
35
STORAGE TANK
SODA WATER
NG
33
STOREHOUSE
RUBBER TUBE WITH PINCH CLAMP
INLET TOWER
37
39
SAMPLE POT
SAMPLE COLLECTION BOTTLE
43
45
41
DRIP SINK
25
CATCH TANK HOUSE

FIG. 6

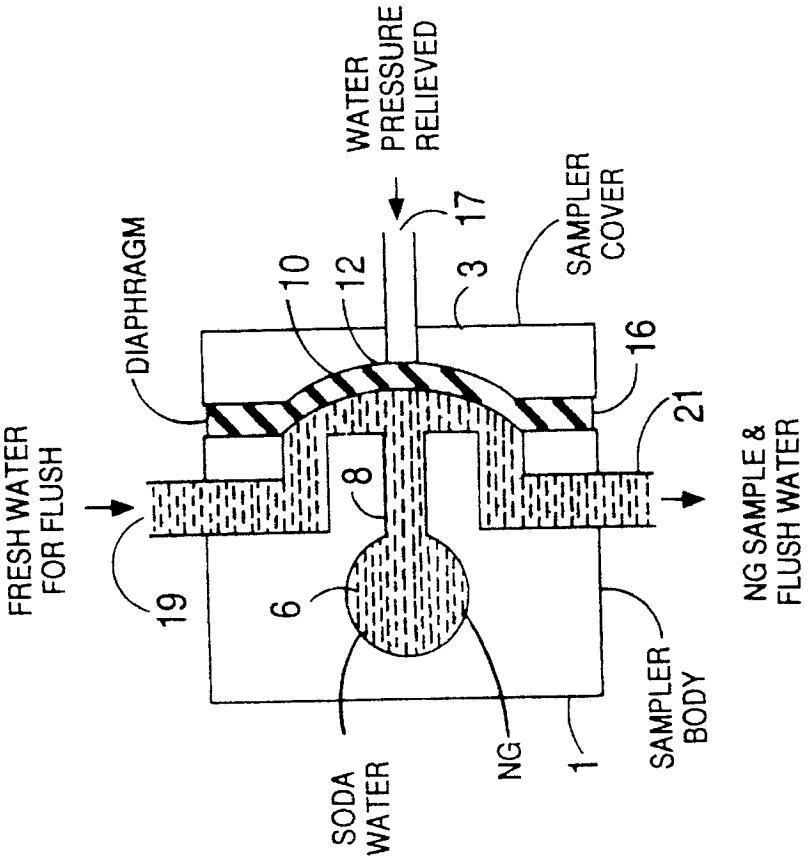
WATER PRESSURE RELIEVED
17
SAMPLER COVER
3
DIAPHRAGM
10
12
16
21
FRESH WATER FOR FLUSH
8
19
6
NG SAMPLE & FLUSH WATER
SAMPLER BODY
SODA WATER
NG
1

FIG. 7B

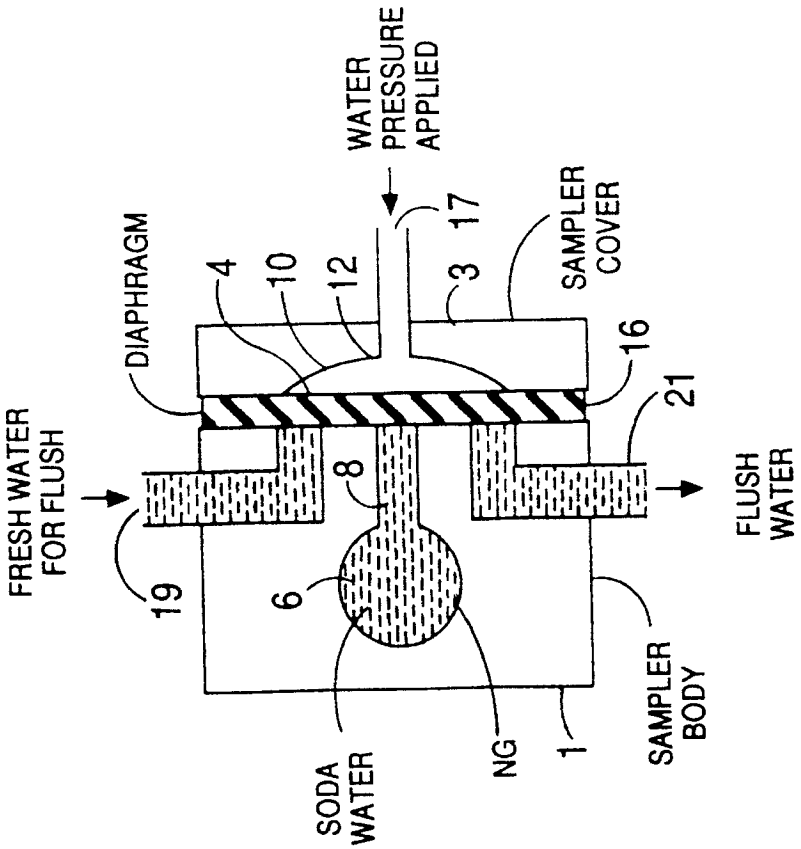
WATER PRESSURE APPLIED
17
SAMPLER COVER
3
4
10
12
DIAPHRAGM
16
21
FRESH WATER FOR FLUSH
8
19
6
FLUSH WATER
SAMPLER BODY
SODA WATER
NG
1

FIG. 7A

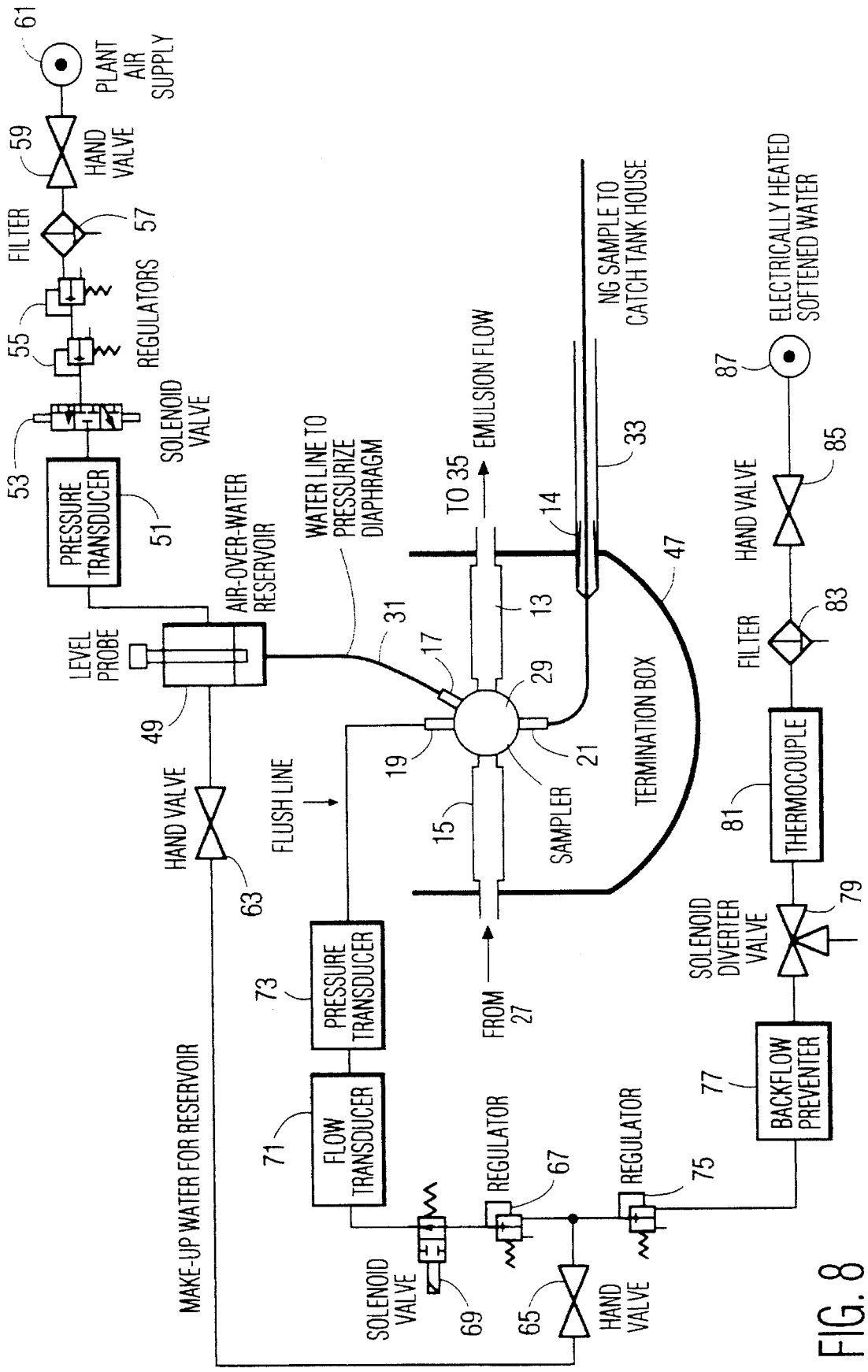
61
PLANT AIR SUPPLY
59
HAND VALVE
FILTER
57
55
REGULATORS
53
SOLENOID VALVE
PRESSURE TRANSDUCER
51
LEVEL PROBE
49
AIR-OVER-WATER RESERVOIR
WATER LINE TO PRESSURIZE DIAPHRAGM
31
17
19
HAND VALVE
63
FLUSH LINE
73
PRESSURE TRANSDUCER
71
FLOW TRANSDUCER
MAKE-UP WATER FOR RESERVOIR
SOLENOID VALVE
69
REGULATOR
67
65
HAND VALVE
REGULATOR
75
TO 35
EMULSION FLOW
13
15
29
21
SAMPLER
FROM 27
14
33
NG SAMPLE TO CATCH TANK HOUSE
47
TERMINATION BOX
ELECTRICALLY HEATED SOFTENED WATER
87
HAND VALVE
85
FILTER
83
THERMOCOUPLE
81
SOLENOID DIVERTER VALVE
79
BACKFLOW PREVENTER
77

FIG. 8

IN-LINE SAMPLING WITH CONTINUOUS FLUSHING FOR FRICTION SENSITIVE LIQUID NITRATE ESTER COMPOSITIONS

GOVERNMENTAL INTEREST

The invention described herein may be manufactured, used and licensed by or for the U.S. Government without payment to us of any royalties.

BACKGROUND OF THE INVENTION

The present invention relates to equipment and methods for the sampling of friction sensitive liquid nitrate esters during the manufacture, transfer or storage of the same. The materials of principal concern are nitroglycerine and diethylene glycol dinitrate. These materials are known to be extremely sensitive to friction. This extreme sensitivity has meant that the transport or processing of the esters can be very hazardous because any accumulations of stagnant nitroglycerine or diethylene glycol dinitrate can lead to detonation from the slightest friction. Therefore, improvements in sampling are an important contribution to this field. Nitroglycerin grades that satisfy military specifications are manufactured under exacting specifications. One result is that the acceptance testing process for the nitroglycerin is itself covered by a specification. Because the material is very sensitive to friction, the sampling, on one hand, needs to accurately represent the material, and on the other hand, needs to be a safe method for personnel who perform it or who are in the vicinity of the manufacturing facility. The current specification for acceptance testing of liquid nitrate esters such as nitroglycerin (NG) at ammunition plants involves the production of a 5000 lb lot from which a small quantity of NG is educted for analysis. This technique has several drawbacks. One disadvantage is that 5000 lbs of NG must first be produced and stored for acceptance testing. In some plants, this quantity will require two hours of production which will result in a large quantity of explosive being held prior to it being declared acceptable for use. There is a further concern as to whether the educted sample taken from the five thousand pound storage lot of NG is a true representation of the contents of the storage tank. The NG is usually transported and stored in the form of an emulsion of NG in water or a solution of soda in water. A safe reliable sampling technique will can save time and expense in the production of NG. A related material is diethylene glycol dinitrate. Of the liquid nitrate esters, nitroglycerin and diethyl glycol dinitrate, are the most sensitive to friction. Although there is substantial experience in the manufacture, storage and transportation of these extremely friction sensitive liquid nitrate esters, the problem of accidental explosions still occurs in the facilities for the manufacture and storage of the NG and DEGDN.

SUMMARY OF THE INVENTION

The present invention is a production facility for these esters with a sampling system that features a remotely-operable, in-line sampler which includes a continuous flow of flush water to carry off samples, no direct metal to metal contact in the presence of the nitrate ester compositions and which has essentially one moving part in the form of a rubber membrane. The sampler is constructed from a single block of stainless steel so that it has no joints or crevices which could trap or accumulate stagnant NG or DEGDN. The present invention also provides a process for sampling which can have variable sampling cycles.

The invention is capable of taking small, individual samples having a volume in the range of about 20–70 milliliters (ml.) and these samples can be combined to form composite samples. The sample cycle can be varied both as to frequency of sampling and as to the size of the individual samples. The sampler and the sampling process are safe to operate, increase the safety of the production or storage facility and increase the safety of the sampling process. It can be practiced in a mode of continuous sampling of the product as the product is produced. It does not require bulk storage of nitroglycerine for the sole purpose of NG acceptance testing. The sampler of the present invention can provide both instantaneous and composite samples of NG as it is produced and this will be an accurate representation of the liquid nitrate ester production product. Thus, it is a suitable alternative to the eduction of samples from storage for production testing.

The sampler installation and the sampling process are designed for remote operation which will reduce dangers to personnel from exposure to liquid nitrate ester and dangers to personnel in the event of accidents or mishaps. The sampler is easy to inspect, service, disassemble and clean. Its construction and materials are compatible with the transfer of friction sensitive liquid nitrate ester in the form of a water emulsion. The practice in U.S. Government facilities is to use emulsions with a water/nitrate ester ratio of about 3:1.

Among the other advantages of the invention are: a sampling system which minimizes the friction applied to a friction sensitive liquid nitrate ester, a liquid nitrate ester product sampler which will operate "on line" and without the necessity of obtaining a large quantity of friction sensitive liquid nitrate ester product for testing and sampling, and the provision of a sampler for liquid nitrate ester product which uses a control system based on pressurized water. It is particularly intended to apply the invention to sampling for production, transportation and storage activities with nitroglycerin and diethylene glycol dinitrate, especially to compositions of these materials in the form of emulsions in water and emulsions in water-soda solutions.

BRIEF DESCRIPTION OF THE FIGURES

The accompanying FIGS. **1–8** are intended to illustrate the practice of the invention.

FIG. **1** is a view of the sampler used in the invention; it is in perspective and from the bottom.

FIG. **2** is a partial elevation of the sampler of FIG. **1**.

FIG. **3** is a view of the upper part of the sampler of FIGS. **1** and **2**; it is in perspective and from the bottom.

FIG. **4** is a top view of the lower part of the sampler of FIGS. **1–3**.

FIG. **5** is an exploded view of the sampler of FIGS. **1–4**; it is in perspective and from the bottom.

FIG. **6** is a schematic flow diagram illustrating the sampling process and a sampler installation according to the invention.

FIGS. **7**A and B are views in schematic of the operation of the sampler of the invention.

FIG. **8** is a diagrammatic view of the sampler system of the invention with its control instrumentation as it may be installed and used in a plant to manufacture nitroglycerine.

DETAILED DESCRIPTION OF THE INVENTION

In general, the sampler is a remotely operable, in-line sampler device for taking samples of the extremely friction

sensitive liquid nitrate ester compositions of nitroglycerine and diethyl glycol dinitrate. The sampler has a flow-through chamber with an offtake line, a moveable rubber membrane and a continuous flush chamber; the membrane is the only moving part in the sampler. The flow-through chamber is in-line with the transfer line; the offtake line is of very small volume and diameter relative to the flow-through chamber and the continuous flush chamber. The membrane is moveable from a closed position at which it closes the bottom of the offtake line and an open position at which a predetermined amount of sample is released from the offtake line into the flush chamber. In the flush chamber, there is a continuous flow of water to create a continuous flushing action which will carry off samples for collection. The flush chamber is positioned to receive any sample of liquid nitrate ester released from the offtake line when the membrane is in the open portion and to flush over and around the side of the membrane when the membrane is in the closed position. This is a positive, continuous flushing action to prevent accumulation of stagnant masses of nitroglycerine or the like. A collector is connected to the sampler for collection of the flush effluent which can then be subjected to the analyses as may be required in the product specification.

As shown in FIGS. **1** and **2**, the sampler has a top section or body **1** and a bottom section or cover **3**. The top section will contain the flow-through chamber, the offtake line and the flush chamber. The bottom section will contain the membrane. The membrane is not shown in FIGS. **1** and **2**.

For service in a plant producing NG, the sampler must be of very heavy duty construction so as to be explosion-proof in the event of an accident. This can be seen from the relative dimensions shown in FIGS. **1–5**. It should have no metal to metal joints in the surfaces that are in contact with the liquid nitrate ester compositions. For this purpose both the body **1** and the cover **3** are fabricated from a single block of well-polished stainless steel. This eliminates the presence of holes or crevices that can trap or accumulate stagnant NG.

A rubber membrane is located between the sampler body **1** and the cover **3**. The assembly of body, membrane and cover are bolted together by four stainless steel nuts and bolts **5**, **7**, **9** and **11**. These are safety wired for positive attachment. A mounting support or bracket **14** is located on the top of the body. The support **14** has holes for mounting the sampler to supports or the like so that it is in position with the transfer line of the liquid nitrate ester product. As shown, the support is a separate piece of metal, stainless steel, which is welded to the body. Other orientations are also feasible.

Ports **15** and **13** are the input and output lines of the flow-through chamber. These meet in the middle of the body and form a short pipeline so that the sampler can be connected to and act as a section of a transfer line containing liquid nitrate ester in a solution of water and soda. This emulsion is a mixture of nitroglycerine in water and soda; it is made up to reduce acidity in the NG. As the composition moves in the flow-through chamber, a portion circulates into the offtake line. Samples will be drawn from the offtake line.

The continuous flush-chamber has an inlet port **19** and an outlet port **21**. Overall, the flush-chamber is located to surround the offtake line. The inlet port **19** is the source of the continuous flush water which will be flowing through the flush-chamber. The output port **21** is the discharge line from the chamber and connects to an exit line which will transport the NG sample to a remote location for analysis. The flush-chamber has an annular cavity that is open at the bottom. This is in contact with the face side of the membrane and will communicate with the offtake line when the membrane is in the open position. In the closed position, the membrane is in contact with the bottom of the flush chamber. The area of surface contact between the membrane and the chamber is sufficient for a good seal when the membrane is in the closed position. The flush water flows continuously through the flush chamber whether the membrane is open or closed.

In the cover or bottom section **3**, there is another control port **17** which contains pressurized water that can be used to control the position and movement of the membrane. By increasing or decreasing the pressure on the water in contact with the membrane to pressures above or below that of the liquid in the transfer line and the offtake line, the position of the membrane relative to the flush-chamber and offtake line is controlled to allow for the taking of samples. When the pressure is decreased, the membrane can move away from the body and into a depression in the cover which opens the flow of sample from the bottom of the offtake line. When pressure is increased, the membrane moves against the body and seals the offtake line. The moving flush water will carry the sample out to the collection apparatus.

There is substantial risk of accident or mishap in the production of nitroglycerine and diethylene glycol dinitrate because of their extreme sensitivity to friction. It is an important feature of the invention that it has essentially only one moving part, the rubber membrane, that is in contact with the liquid nitrate ester composition. The configuration and the arrangement of the in-line flow-through chamber, the offtake line, the membrane and the continuous flush-chamber contribute to the practical achievement of the one moving part design.

As shown in FIG. **2**, a baffle **2** is incorporated in the downstream line of the flow-through chamber in the sampler. The baffle **2** is located on the downstream side of the sampler and is in the output sample port **13**. Baffle **2** serves to increase the upstream pressure in the sampler and to promote back-mixing inside the sampler to obtain representative samples.

FIG. **3** is a bottom view in perspective of the sampler body **1**. This shows the interior construction of the offtake line **8** and the continuous flush chamber **4**. The inlet and outlet ports, **15** and **13**, of the flow-through chamber are directly connected to each other at the center of the body. There is no other fitting and no other impediment to the flow in the sampler and this allows it to be mounted in-line. The offtake line **8** starts at the flow-through chamber and continues to the bottom of the body. The offtake line is of very small diameter and cross-section compared to the flow-through chamber. The offtake line can be a small hole drilled or bored into the bottom of the block from which the body is made.

The continuous flush chamber **4** has an inlet port **19** which enters the chamber at **19A**. The flush chamber is an annular segment concentric with the offtake line. It has an annular cavity which may be formed by boring into the bottom of the block from which the body **1** is made. There is an outlet in the flush chamber which is the beginning of the outlet port **21**. The continuous flush chamber has a volume several fold that of the offtake line. Water flows continuously into the chamber. It is intended to sweep the surfaces of the membrane and of the chamber clean and to meet, pick up and continuously remove any liquid nitrate ester or emulsion that may flow out of the offtake line. The continuous flowing action of the flush water is intended to provide a high degree of safety and sampling reliability for the process.

For the embodiment shown in the Figures, the dimensions are to scale. Typical dimensions for the sampler are an overall length of 9 ¾"; the main body being 1 31/32" thick by 3 ⅜" diameter. The cover is ½" thick. The membrane is 0.032" thick by 3 ⅜" diameter. The inlet and outlet lines for the NG emulsion are 1 3/64" I.D. and 1 3/16" O.D. The offtake line for the sample has a 1/16" diameter. The water flush lines have ⅛" I.D. The annular chamber is about 13/32" deep and the channel width is ¼". The offtake line may be inclined to the vertical; an angle of about 17° can be used. The baffle is on the downstream end of the sampler and is about ½ the area of the line. In the cover, the central depression which receives the membrane is about ⅞" diameter and the depression is about 1/16" deep.

The top mounting bracket as shown is a separate piece of metal which is welded to the body; for this construction it is ½" thick and 6" at its maximum length, the holes are 7/16" diameter. In the sampler, all surfaces in contact with the liquid nitrate ester will be rounded to eliminate sharp edges and the surfaces will be very smooth.

FIG. **4** is a top view of the cover **3** shown in FIGS. **1** and **2**. The cover fits to the bottom of the body and as described before will be made from the same block of metal as is used for the body. The bottom cover **3** has a central depression **10** and an opening **12** which is for pressurized water from line **17**. The pressurized water will be used to control the position of the membrane and to act as a second safety system in the sampler. The central depression is of a depth to allow for movement of the rubber membrane to an open position from the closed position where the membrane is against the bottom end of the offtake line.

FIG. **5** is an exploded isometric view from the bottom of the sampler of FIGS. **1–4**. Similar numbers refer to similar parts. The membrane **16** fits between the body **1** and the cover **3**. In the closed position, the membrane will fit against the bottom of the offtake line **8** and the surrounding bottom of the flush chamber. This forms a seal that keeps the offtake line closed. In the closed position, the continuously flowing flush water will sweep and clean the surface of the membrane. If by some accident or defect in material, any emulsion would leak from the offtake line, the flush water would remove it from the sampler and transport it to a collector. This is a fail safe feature of the invention. When a sample from the flow-through chamber is to be taken, the pressure in the water line **17** is reduced for a predetermined period of time. The membrane moves away from the end of the offtake line and allows sample to flow into the flush chamber. A predetermined quantity of sample flows out of line **8** and is drawn into the flush chamber and discharged in line **21**.

The sampling system of the invention may be installed in accordance with the system shown in FIG. **6**. More particularly, a storehouse **23** and a catch tank house **25** are used. An emulsion of NG and soda water from a NG manufacturing facility is fed via transfer line **27** to the sampler shown generally at **29**. Flush water is provided to the sampler via line **31** from a source not shown. The outlet side of the sampler is connected to the inlet tower of storage tank **35**. Thus, the sampler of the invention is mounted in-line on the transfer line between the outlet line **27** from the manufacturing plant and the storage facility **23**.

The sampler output is taken by a sample line **33** from the storehouse **23** to a remote location at the catch tank house **25** where the sample can be collected for analysis and testing. Thus, sample line **33** is connected to the inlet tower **37** of sample pot **39**. The sample pot **39** is tapped from a tube and pinch clamp **41** into sample collection bottle **43** in a drip sink **45**.

Two independent safety and control systems are provided to operate the sampler and the sampling process of the invention. The first independent safety system is the continuous flush water control system **31** shown here in FIG. **6**. As previously described, it provides flush water to transport the NG sample out of the sampler **29** and into the sampler line **33** leading to the sample pot **39** in the adjacent catch tank house **25**. The second independent safety system is having the membrane movement controlled by a second independently pressurized water system. Water pressure is applied to the membrane **16** through the water inlet shown in FIG. **5**. To open the offtake line and to obtain a sample, the pressure applied on the membrane **16** is relieved on a previously determined pattern during the NG emulsion transfer operation. The pressure in the NG transfer line will force a small quantity of NG emulsion to exit through the offtake line and to flow into the flush chamber. The flush water will continuously flow through the sampler and flush the NG sample out of the flush chamber and into the sample exit line. If transfer line pressure fails, the membrane, under the positive water pressure, will move and close the offtake line. The continuous flow of flush water removes any accidental spills or leaks from the offtake line. Also, the positive water pressure on the membrane will flow water into the flush chamber if any leaks or tears should occur in the membrane.

The operation of the sampler system is illustrated in the schematic flow scheme of FIGS. **7A** and **7B**. FIG. **7A** shows the sampler with closed offtake line and continuously flowing flush water. The offtake line is closed by the position of the membrane which is controlled by the water pressure applied at water pressure port **17**. In this mode, the membrane **16** is pressed against the bottom of the flush chamber and seals the end of the offtake line. This effects a very strong seal against the offtake line. The NG and soda water in the transfer line is not sampled and flows directly into storage. In FIG. **7B**, a sample cycle is shown in which a small sample flows out of the flow-through chamber through the offtake line and into the continuous flush chamber. This occurs when the seal of the membrane is released by movement of the membrane away from the bottom of the flush chamber. This is a result of the reduction in the applied water pressure. Water pressure is relieved at water pressure port **17** to cause the membrane **16** to move away from the offtake line so that the emulsion of NG and soda water from the manufacturing plant can be sampled. The combination of the open and the closed cycles can be varied. This means that a sampling cycle can be developed in which samples of varying size are obtained at different times during the sampling process. Alternatively, samples of the same size may be obtained but the sample time can be varied. A composite sample may be obtained from several small samples.

An illustration of the sampling system and a form of instrumentation that may be used to control the sampling system is shown in FIG. **8**. As shown, the sampler of the invention is shown generally at **29** and is mounted in a support box **47**. The sampler is attached to a transfer line by attaching the ports **15** and **13** to a transfer line **27** which is between a neutralizer and a storage tank **35**. Inlet flush port **19** is connected to a source of water. Control water pressure port **17** for the membrane is connected to water line **31**. Outlet flush port **21** is connected to sample line **33** to convey the sample to catch tank house **25**. The sample line **33** may be connected through the wall of termination box **47** with a fitting shown generally at **14**.

The control instrumentation of FIG. **8** uses a source of pressurized air **61** and a source of electrically heated soft-

ened water **87**. The air line includes an air valve **59**, air filter **57**, pressure regulators **55**, a solenoid control valve **53**, and a pressure transducer **51**. The air is connected to an air-over-water reservoir **49**.

The water line includes a hand valve **85** connected to the water source **87**. The valve **85** is connected to a filter **83**, a thermocouple **81**, a solenoid diverter valve **79**, a backflow preventer **77** and a regulator **75**. The water is tapped at the output of regulator **75** and is connected to air-over-water reservoir **49** via hand valves **65** and **63**. The water is also connected from regulator **75** to another regulator **67**, a solenoid valve **69**, a flow transducer **71**, a pressure transducer to flush port **19**. The pressure of the pressurized water is controlled by the control of the pressure of the air which presses the water to the membrane surface.

In the preferred embodiment, a **40** durometer silicone rubber was selected as the material for the membrane. The sampler is also compatible with transfer and sampling of emulsions of diethylene glycol dinitrate (DEGDN) without modification. The silicone rubber diaphragm **16** will be changed once a month as a preventative maintenance measure.

It will be understood that as equivalents of the invention may be made without departing from the spirit and scope of the invention, it is intended in the following claims to protect the substitutions, modifications and variations of materials, elements and process steps as are and will be practiced in this field as well as the specific embodiments described above.

We claim:

1. In a production plant for the manufacture of friction sensitive liquid nitrate esters that are used as energetic liquids, said esters being selected from the group consisting of nitroglycerine and diethylene glycol dinitrate, said plant having a reaction unit to produce compositions of the liquid nitrate esters, a storage unit for storage of said compositions, the improvement comprising having a transfer line connected to the reaction unit, a transfer line connected to the storage unit, and a sampler connected to at least one of the transfer lines, and wherein the sampler is a remotely operable, inline sampler for taking samples of the liquid nitrate ester composition while said composition flows through said transfer line and sampler, the sampler having a flow-through chamber with an offtake line, a moveable membrane and a continuous flush chamber, the membrane being the only moving part in the sampler and the surfaces of the sampler in contact with the liquid nitrate composition being formed from a single piece of stainless steel, and where (a) the flow-through chamber is in line with the transfer line, (b) the offtake line is of very small volume and diameter relative to the flow-through chamber, (c) the membrane is moveable from a closed position at which it closes the bottom of the offtake line and an open position at which a predetermined amount of sample is released from the offtake line, (d) the flush chamber has a continuous water supply and is positioned to flush sample released from the offtake line when the membrane is open and to flush over the membrane when the membrane is closed, and (e) a collector is connected to the sampler for collection of the flush effluent.

2. The plant of claim **1** wherein the membrane is in contact with pressurized water to control the movement of explosive composition through the off-take line.

3. The plant of claim **1** wherein the flush chamber surrounds the offtake line.

4. The plant of claim **1** wherein the sampler is controlled to provide sample sizes from the offtake line in the range of about 20 to about 70 milliliters.

5. In a process for transferring and sampling a friction sensitive composition of a liquid nitrate ester selected from the group consisting of nitroglycerine and diethyl glycol dinitrate, the improvement comprising (a) transferring said composition through a transfer line and a sample zone, the sample zone having a major portion of the composition flow through a chamber inline with the transfer line and having a very small portion of composition flow into a takeoff zone connected to the inline chamber, (b) maintaining a continuous flow of flush water in a flush zone surroundings the takeoff zone, (c) moving a membrane to open said takeoff zone at the bottom thereof to draw a sample of composition and to flush the sample from the takeoff zone with the flush water, (d) moving the membrane to close said takeoff zone and (e) collecting the effluent of sample and flush water, the sampling being conducted under conditions of remote operation.

6. The process of claim **5** wherein the sample is a composite of several cycles of sampling.

7. The process of claim **6** wherein the sample size is in the range of about 20 to about 70 ml.

8. The process of claim **5** wherein the liquid nitrate ester is nitroglycerine.

9. The process of claim **5** wherein the liquid nitrate ester is diethylene glycol dinitrate.

10. The process of claim **5** wherein the composition is in the form of an emulsion of liquid nitrate ester in water.

11. The process of claim **7** wherein the composition is in the form of an emulsion of liquid nitrate ester in water and soda.

* * * * *