US005700088A

United States Patent [19]

Piacente et al.

[11] Patent Number: 5,700,088

[45] Date of Patent: Dec. 23, 1997

[54] **AMMUNITION PROPELLANT TEMPERATURE MEASURING ASSEMBLY**

[75] Inventors: **Robert A. Piacente**, Schenetady; **Karol Anne Liu Madulka**, Ballston Spa; **John M. Kenna**, Rensselaer, all of N.Y.

[73] Assignee: **The United States of America as represented by the Secretary of the Army**, Washington, D.C.

[21] Appl. No.: **540,605**

[22] Filed: **Oct. 6, 1995**

[51] **Int. Cl.**[6] **G01K 1/16**; G01K 13/00; G01J 5/00; F41A 31/00

[52] **U.S. Cl.** **374/141**; 73/167; 102/481; 42/1.01; 364/557

[58] **Field of Search** 374/126, 128, 374/141, 142; 73/167; 42/1.01; 102/481; 364/557

[56] **References Cited**

U.S. PATENT DOCUMENTS

3,575,085	4/1971	McAdam, Jr.	89/41.01
3,902,368	9/1975	Hasenbein et al.	73/167
3,956,966	5/1976	French	374/178
5,024,136	6/1991	Bock	89/6
5,282,017	1/1994	Kasindorf et al.	374/126
5,326,172	7/1994	Ng	374/126
5,326,173	7/1994	Evans et al.	374/126
5,624,189	4/1997	Vottis et al.	374/141

Primary Examiner—Diego F. F. Gutierrez
Attorney, Agent, or Firm—Michael C. Sachs

[57] **ABSTRACT**

An ammunition propellant temperature measuring assembly comprising a first temperature measuring device for determining at least two surface temperatures of a round of ammunition and for transmitting a first signal indicative of the surface temperature, a second temperature measuring device for determining ambient temperature in a storage area for the ammunition and for transmitting a second signal indicative of the ambient temperature, and computer apparatus for receiving the first and second signals and a temperature profile for the ammunition, and adapted to compute therefrom a propellant temperature of the round.

10 Claims, 1 Drawing Sheet

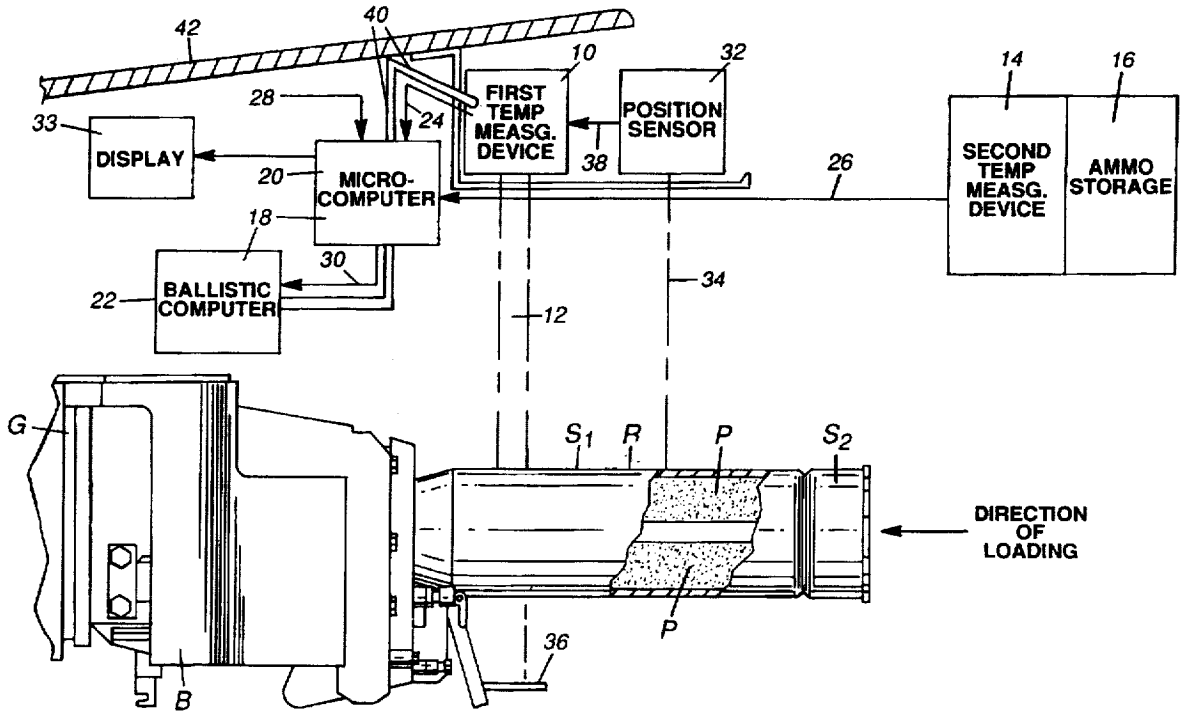

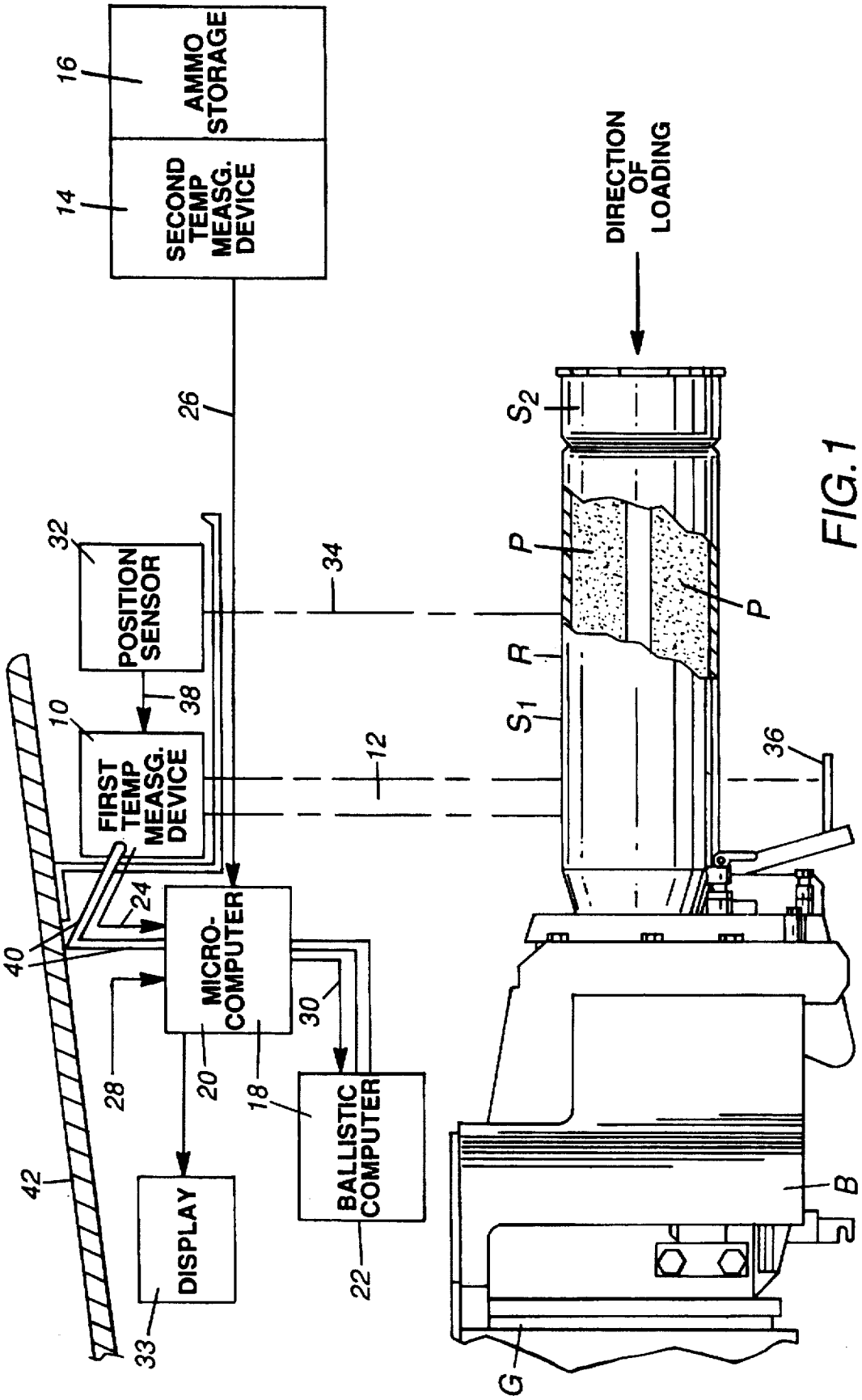
AMMO STORAGE
SECOND TEMP MEASG. DEVICE
DIRECTION OF LOADING
POSITION SENSOR
FIRST TEMP MEASG. DEVICE
MICRO-COMPUTER
BALLISTIC COMPUTER
DISPLAY
16
14
26
32
34
38
10
12
24
40
28
20
18
30
22
33
42
36
S2
P
P
R
S1
B
G

FIG. 1

AMMUNITION PROPELLANT TEMPERATURE MEASURING ASSEMBLY

STATEMENT OF GOVERNMENT INTEREST

The invention described herein may be manufactured, used and licensed by or for the Government for Governmental purposes.

BACKGROUND OF THE INVENTION

1. Field of the Invention

The invention relates to the measurement of temperature of ammunition, and is directed more particularly to the measurement of ammunition propellant temperature on a round to round basis.

2. Description of the Prior Art

In the gun fire systems of tanks and other armored vehicles, it has been known that the temperature of a round of ammunition plays a role in gun firing accuracy.

It is common in such vehicles to provide a temperature gage in the ammunition storage compartment of the vehicle to measure the air temperature in the compartment. Once measured, the air temperature is manually entered into a ballistic computer. Such a system requires that the rounds be stabilized to the ambient temperature in the storage compartment which, in turn, sometimes requires that old rounds be fired before newly stored rounds.

It has recently become known that the propellant temperature of a round has a significant bearing on gun firing accuracy. Under the prior art system, there is no means by which to measure propellant temperature of a single round at any given time, particularly while the round is being loaded into a gun.

Accordingly, there is a need, in a gun fire control system, for an ammunition propellant temperature measuring means which has the capability of determining the propellant temperature of individual rounds as they are loaded into the breach of an associated gun.

SUMMARY OF THE INVENTION

It therefore is an object of the invention to provide an assembly for measuring the propellant temperature of ammunition.

A further object of the invention is to provide such an assembly for effecting such measurements on a round by round basis.

A still further object of the invention is to provide such an assembly as is capable of effecting such measurements on a given round during the loading of that round into the breech of an associated gun.

With the above and other objects in view, as will hereinafter appear, a feature of the invention is the provision of an ammunition propellant temperature measuring assembly comprising a first temperature measuring device for determining at least two surface temperatures of a round of ammunition and for transmitting a first signal indicative of the surface temperatures, a second temperature measuring device for determining ambient temperature in a storage area for the ammunition and for transmitting a second signal indicative of the ambient temperature, and computer means for receiving the first and second signals and a temperature profile for the ammunition, and adapted to compute therefrom the propellant temperature of the round.

The above and other features of the invention, including various novel details of construction and combinations of parts, will now be more particularly described with reference to the accompanying drawings and pointed out in the claims. It will be understood that the particular assembly embodying the invention is shown by way of illustration only and not as a limitation of the invention. The principles and features of this invention may be employed in various and numerous embodiments without departing from the scope of the invention.

BRIEF DESCRIPTION OF THE DRAWINGS

Reference is made to the accompanying drawings in which is shown an illustrative embodiment of the invention, from which its novel features and advantages will be apparent.

In the drawings:

FIG. 1 is diagrammatic illustration of one form of measuring assembly illustrative of an embodiment of the invention.

DESCRIPTION OF THE PREFERRED EMBODIMENTS

Referring to FIG. 1, it will be seen that the illustrative assembly is associated with a breech B of a gun G and is adapted to act upon a round R of ammunition having surfaces S_1 and S_2, and in which there is disposed a propellant P. Prior to firing, the round R is loaded into the breech B.

The inventive assembly includes a first temperature measuring device **10** which projects an infrared sensing beam **12** for measurement of the surface temperature of the round R just prior to the entry of the round R into the breech B. The first temperature measuring device **10** preferably is an infrared transducer, known in the art. One such transducer found acceptable is known as the Series 3000 transducer, produced by Everest Interscience, Inc. The operation of the first temperature measuring device **10** is based upon the fact that the round surfaces S_1 and S_2 emit infrared energy, as do all surfaces. The wavelengths of the emitted energy relate to the temperatures T_{S1} and T_{S2} of the surfaces S_1 and S_2 respectively. The surfaces S_1 and S_2 of the round R also reflect infrared radiation emitted by surrounding surfaces. The infrared temperature measuring device, that is, the first temperature measuring device **10**, is able to receive a portion of the infrared radiation emitted and reflected by the surface S_1 and S_2 of the round R and, from it, generate at least two corresponding surface temperatures T_{S1} and T_{S2}. With respect to the specific examples illustrated by equations 1 through 4, the first surface temperature T_{S1} refers to a cartridge case temperature Tc; and the second temperature T_{S2} refers to a stub case temperature Ts. With respect to the specific examples illustrated by equations 5 through 8, the first surface temperature T_{S1} refers to a cartridge case temperature Tc; and the second temperature T_{S2} refers to an average warhead (projectile) surface temperature Tw.

The assembly herein further includes a second temperature measuring device **14** disposed in an ammunition storage compartment **16** from whence are taken the rounds for the gun G.

A computer means **18**, which may include a microcomputer **20** and a ballistic computer **22**, is provided. If the computer means **18** includes the microcomputer **20** and the ballistic computer **22**, the microcomputer **20** is adapted to receive signals from the first and second temperature measurement devices **10**, **14**.

The first temperature measuring device **10** is adapted to transmit a first signal **24** indicative of the measured surface

temperatures of the round to the microcomputer **20**. Similarly, the second temperature measuring device **14** is adapted to transmit a second signal **26** indicative of the ambient temperature T_A in the ammunition storage compartment **16**, to the microcomputer **20**.

As noted above, the microcomputer **20** is adapted to receive the signals **24**, **26** from the first and second temperature measuring devices. The microcomputer **20** is further adapted to receive and retain a temperature profile **28**, which may be entered into the microcomputer **20** manually or by automatic means. The microcomputer **20** is adapted to compute from the first and second temperature signals **24**, **26** and from the temperature profile **28**, the temperature of the propellant P in the particular round R entering the breech B, and to transmit a signal **30** to the ballistic computer **22**, the signal being indicative of the computed temperature of the propellant. The ballistic computer is then able to refine the expected trajectory of the round, and thereby enhance accuracy of the round upon firing.

Mounted proximate the first temperature sensing device **10** is a position sensor **32** which projects a beam **34** of energy, such as a light beam, onto a reflector **36** which reflects the beam **34** back to the sensor **32**. The energy beam **34** may, alternatively, be an infrared beam. If so, the beam comprises infrared wavelengths significantly different from those associated with the first temperature sensor **10**, so as not to interfere with the first temperature sensor. Upon interruption of the beam **34** by movement of the round R toward the breech B, the sensor, after a slight delay, usually of about one-half second, sends a wake-up call **38** to the first temperature measuring device **10** to activate the device **10**. The wake-up call **38** is delayed so as not to activate the first temperature measuring device **10** upon momentary interruption of the energy beam **34**, as by movement of an operator's hand therethrough.

When the above-described assembly is used in a tank, or similar vehicle, the position sensor **22**, first temperature sensor **10**, and computer means **18** may be supported by brackets **40** fixed to a gun turret top portion **42**, or other relatively stable structural element.

It is to be understood that the present invention is by no means limited to the particular assembly herein disclosed and/or shown in the drawings, but also comprises any modifications or equivalents within the scope of the claims. For example, the computer means **18** may comprise a single ballistic computer with capability of performing the tasks above assigned to the microcomputer. When two computers are used, as described above, the microcomputer may, rather than sending the signal **30** to the ballistic computer, simply display the propellant temperature which may then be entered manually into the ballistic computer. The propellant temperature may be displayed on a display **33**. The second temperature measuring device **14** may be electrical or mechanical. If electrical, it is contemplated that the device **14** will send the signal **26** directly to the microcomputer **20**, as described above and as illustrated in. FIG. **1**. However, if the second temperature measuring device is mechanical, the storage compartment ambient temperature may be displayed and manually input into the microcomputer.

Further, though mention is made above of the utility of the assembly in tank and armored vehicle environments, it will be apparent that the assembly described herein is applicable to any gun operated by a computerized fire control system, such as fixed emplacements, naval gun turrets, and the like.

There is thus provided an ammunition propellant temperature measuring assembly which effects measurement of the propellant temperature of an individual round of ammunition at the last moment before the round enters the breech of the gun.

Attached are formulas or equations for the Algorithm to convert surface temperatures to propellant temperatures for various rounds of ammunition. These formulas or equations correspond to the temperature profile of the ammunition and are indicative of a relationship between the first temperature signal **24** (representative of the measured two surface temperatures of the round R), the second temperature **26** (representative of the ambient temperature in the ammunition storage compartment **16**), and the temperature of the propellant P.

ALGORITHM TO CALCULATE PROPELLANT TEMPERATURES M829A1 ROUNDS (EQUATION 1)

$$T_P = \begin{cases} T_A \\ \text{IF } T_C = T_A \text{ OR } T_S = T_A \\ T_A + 1.90463(T_C - T_A)\left|\dfrac{T_C - T_A}{T_S - T_A}\right|^{.257625} \\ \text{IF } T_C \neq T_A \text{ AND } T_S \neq T_A \end{cases}$$

WHERE:

T_P IS THE AVERAGE PROPELLANT TEMPERATURE
$T_{S1} = T_C$ IS THE CARTRIDGE CASE TEMPERATURE
$T_{S2} = T_S$ IS THE STUB CASE TEMPERATURE
T_A IS THE AMBIENT TEMPERATURE
RESIDUAL STANDARD DEVIATION: 3.18

ALGORITHM TO CALCULATE PROPELLANT TEMPERATURES M829 ROUNDS (EQUATION 2)

$$T_P = \begin{cases} T_A \\ \text{IF } T_C = T_A \text{ OR } T_S = T_A \\ T_A + 2.03659(T_C - T_A)\left|\dfrac{T_C - T_A}{T_S - T_A}\right|^{.0777432} \\ \text{IF } T_C \neq T_A \text{ AND } T_S \neq T_A \end{cases}$$

WHERE:

T_P IS THE AVERAGE PROPELLANT TEMPERATURE
$T_{S1} = T_C$ IS THE CARTRIDGE CASE TEMPERATURE
$T_{S2} = T_S$ IS THE STUB CASE TEMPERATURE
T_A IS THE AMBIENT TEMPERATURE
RESIDUAL STANDARD DEVIATION: 3.35

ALGORITHM TO CALCULATE PROPELLANT TEMPERATURES M865 ROUNDS (EQUATION 3)

$$T_P = \begin{cases} T_A \\ \text{IF } T_C = T_A \text{ OR } T_S = T_A \\ T_A + 2.15190(T_C - T_A)\left|\dfrac{T_C - T_A}{T_S - T_A}\right|^{-.0356577} \\ \text{IF } T_C \neq T_A \text{ AND } T_S \neq T_A \end{cases}$$

WHERE:

T_P IS THE AVERAGE PROPELLANT TEMPERATURE
$T_{S1} = T_C$ IS THE CARTRIDGE CASE TEMPERATURE
$T_{S2} = T_S$ IS THE STUB CASE TEMPERATURE
T_A IS THE AMBIENT TEMPERATURE
RESIDUAL STANDARD DEVIATION: 3.89

-continued

ALGORITHM TO CALCULATE PROPELLANT TEMPERATURES
M831 ROUNDS (EQUATION 4)

$$T_P = \begin{cases} T_A \\ \text{IF } T_C = T_A \text{ OR } T_S = T_A \\ T_A + 1.90099(T_C - T_A)\left|\dfrac{T_C - T_A}{T_S - T_A}\right|^{-.0232289} \\ \text{IF } T_C \neq T_A \text{ AND } T_S \neq T_A \end{cases}$$

WHERE:

T_P IS THE AVERAGE PROPELLANT TEMPERATURE
$T_{S1} = T_C$ IS THE CARTRIDGE CASE TEMPERATURE
$T_{S2} = T_S$ IS THE STUB CASE TEMPERATURE
T_A IS THE AMBIENT TEMPERATURE
RESIDUAL STANDARD DEVIATION: 3.63

TANK AMMO THERMAL TEST
T_P IS THE AVERAGE PROPELLANT TEMPERATURE
T_C IS THE CARTRIDGE CASE TEMPERATURE
(SURFACE TEMPERATURE T_{S1})
T_W IS THE AVERAGE WARHEAD(PROJECTED)
TEMPERATURE(SURFACE TEMPERATURE T_{S2})
T_A IS THE AMBIENT AIR TEMPERATURE
M829A1 ROUNDS(EQUATION 5)

$$T_P = \begin{cases} T_A, \text{ if } T_C = T_A \text{ or } T_W = T_A \\ T_A + 2.264(T_C - T_A)\left|\dfrac{T_C - T_A}{T_W - T_A}\right|^{-0.4686} \\ \text{if } T_C \neq T_A \text{ and } T_W \neq T_A \end{cases}$$

M829 ROUNDS(EQUATION 6)

$$T_P = \begin{cases} T_A, \text{ if } T_C = T_A \text{ or } T_W = T_A \\ T_A + 3.015(T_C - T_A)\left|\dfrac{T_C - T_A}{T_W - T_A}\right|^{0.3243} \\ \text{if } T_C \neq T_A \text{ and } T_W \neq T_A \end{cases}$$

M865 ROUNDS(EQUATION 7)

$$T_P = \begin{cases} T_A, \text{ if } T_C = T_A \text{ or } T_W = T_A \\ T_A + 2.162(T_C - T_A)\left|\dfrac{T_C - T_A}{T_W - T_A}\right|^{-0.3127} \\ \text{if } T_C \neq T_A \text{ and } T_W \neq T_A \end{cases}$$

M831 ROUNDS(EQUATION 8)

$$T_P = \begin{cases} T_A, \text{ if } T_C = T_A \text{ or } T_W = T_A \\ T_A + 2.095(T_C - T_A)\left|\dfrac{T_C - T_A}{T_W - T_A}\right|^{0.0151} \\ \text{if } T_C \neq T_A \text{ and } T_W \neq T_A \end{cases}$$

What is claimed is:

1. An ammunition propellant temperature measuring assembly comprising:

a first temperature measuring device for determining at least two surface temperatures of a round of ammunition and for transmitting a first signal indicative of said at least two surface temperatures;

a second temperature measuring device for determining ambient temperature in a storage area for said round of ammunition and for providing a second signal indicitive of said ambient temperature; and

a computer for receiving said first signal, said second signal, and an input as to a temperature profile for said round of ammunition corresponding to a relationship between said at least two surface temperatures, said ambient temperature, and the propellant temperature, to compute therefrom the propellant temperature of said round.

2. The assembly in accordance with claim **1** wherein said assembly includes a display of said indication of said ambient temperature and said computer manually receives said second signal.

3. The assembly in accordance with claim **1** further comprising a position sensor disposed proximate said first temperature measuring device for detecting movement of said round toward a gun breech and to signal said first temperature measuring device to begin a temperature measuring operation.

4. An ammunition propellant temperature measuring assembly comprising:

a first temperature measuring device for determining at least two surface temperatures of a round of ammunition and for transmitting a first signal indicative of said at least two surface temperatures;

a second temperature measuring device for determining ambient temperature in a storage area for said round of ammunition and for transmitting a second signal indicative of said ambient temperature; and

a computer for receiving said first and second signal and a temperature profile for said round of ammunition corresponding to a relationship between said at least two surface temperatures, said ambient temperature, and the propellant temperature, for computing therefrom the propellant temperature of said round.

5. The assembly in accordance with claim **4** wherein said first temperature measuring device comprises an infrared transducer.

6. The assembly in accordance with claim **5** for use with a gun that fires said round, wherein said computer comprises a first computer for computing said propellant temperature, and a ballistic computer, said first computer transmitting a signal indicative of said propellant temperature to said ballistic computer, and said ballistic computer receiving said signal indicative of said propellant temperature to refine an expected trajectory of said round.

7. The assembly in accordance with claim **4** and further comprising a position sensor disposed proximate said first temperature measuring device for detecting movement of said round toward a gun breech and to signal said first temperature measuring device to begin a temperature measuring operation.

8. The assembly in accordance with claim **7** wherein said position sensor emits a beam of energy, and said assembly includes a reflector in position to receive said beam and reflect said beam at least in part back to said sensor, said position sensor and said reflector being on opposite sides of said breech, such that said round in moving toward said breech interrupts said beam.

9. The assembly in accordance with claim **8** wherein said position sensor delays said signal to said first temperature measuring device for a selected time after interruption of said beam.

10. An ammunition propellant temperature measuring assembly for use with a gun that fires a round of ammunition, comprising:

a first temperature measuring device disposed proximate a gun breech that receives ammunition, said first temperature measuring device determining at least two surface temperatures of the round of ammunition entering said breech and transmitting a first signal indicative of said at least two surface temperatures;

a second temperature measuring device disposed in a storage area for said round of ammunition for determining an ambient temperature in said storage area and for transmitting a second signal indicative of said determined storage area ambient temperature;

a first computer for receiving said first signal, said second signal, and a temperature profile for said round of ammunition corresponding to a relationship between said at least two surface temperatures, said ambient temperature, and the propellant temperature, and computing therefrom the propellant temperature of the round of ammunition, said first computer transmitting a signal indicative of said computed propellant temperature;

a ballistic computer receiving said signal indicative of said computed propellant temperature from said first computer to refine an expected trajectory of the round of ammunition upon firing from the gun;

a position sensor disposed proximate said first temperature measuring device for detecting movement of the round toward said breech and to signal said first temperature measuring device to begin a temperature measuring operation; and

a reflector mounted proximate said gun breech on an opposite side thereof from said position sensor and in alignment with said position sensor to receive and reflect an energy beam from said position sensor, said signal from said position sensor to said first temperature measuring device being triggered by interruption of said beam by the round of ammunition moving toward said breech.

* * * * *